Appendix A – Release Plan Work Products

This appendix includes the following work products related to the CHART System Release Plan and the allocation of requirements. It includes the following:

- Detailed Release Plan of all mid-level requirements, ordered by release.
- List of mid-level Process requirements.
- List of lower level requirement suggestions captured in the workshops that can be considered for specific enhancements

A.1 Detailed Release Plan

This Detailed Release plan includes each of the mid-level requirements, ordered by release starting with Release 3. This plan reflects the current release of CHART (Release 14) with requirements incorporated into the system shaded in green. A graphical summary of the releases is provided in Section 10.

Notes:

- The parenthetical numbers after some requirement descriptions refer to the business process number. Refer to the corresponding process number in the Business Process Model section (Section 4)
- Numbering between initial sections of requirements was not consecutive; "TBD" placeholders were used.

	Reqmt Desc.	Op era-tor	Political/ Stake-holder	Ad min	Overa ll	Political/ Stake-holder	Tech-nical	Depend-ence	Overall	Cat	Qua d	Rel/Bl d	Priority
15.	Alerts – allow system admin to define conditions (2.4)	L	L	H	M-	n/a	M	M	M	Alerts	III	3.1/10	12
17.	Alerts – Issue alerts (3.3)	H	L	H	H-	n/a	M+	H	H-	Alerts	II	3.1	10
18.	Alerts – Respond to alerts (3.4)	H	L	H	H	n/a	M+	H	H-	Alerts	II	3.1	11
20.	Events – Open event user navigation; not tied to event type (4.1.1)	H	n/a	H	H	n/a	M+	H	H-	EM	II	3.1	
21	Events - event location using pulldowns of known roads (4.1.1.1); especially pulldowns first	H	L	H	M+	n/a	M+	H	H-	GUI	II	3.1	2
21.	Events - event location using map and pulldowns of known roads (4.1.1.1)	H	L	H	M+	n/a	M+	H	H-	Map	II	3.1	2

	Reqmt Desc.	Op era-tor	Political/ Stake-holder	Ad min	Overa ll	Political/ Stake-holder	Tech-nical	Depend-ence	Overall	Cat	Qua d	Rel/Bl d	Priority
23.	Events – dupe detection and merging (4.1.1.5), with 21*	H	n/a	M	H-	n/a	M	H	M+	EM	II	3.1	6
32.	Events – change/transfer event type (4.3.3). Dependent on 4.1.1; could be done at the same time	H	n/a	H	H	n/a	M+	H	H-	EM	II	3.1	47
99.	Improve text-to-speech capabilities	H	N/A	H	H	N/A	L	L	L	L	I	3.1	7
103.	Implement CHART user interface improvements as desired by CHART management/user community (possibly done in concurrence with event flow processes #21)	H	N/A	H	H	N/A	M	H	H-	GUI	II	3.1/12	4
105.	Integrate/improve lane configuration data entry in an event definition (not map or map data)	M	M+	M	M	N/A	M	M	M	GUI	I	3.1	3
14.	Device plan, advanced sort and searching (2.3.3)	H	n/a	H	H	L	M	M	M-	GUI	I	3.2	9
16.	Event scheduler (2.5)	H	M	H	H-	n/a	M+	H	H-	Sche	II	3.2	13
93.	Integrate/automate with paging/faxing system	H	L	H	H-	n/a	M	M	M	L	I	3.2	1

	Reqmt Desc.	Op era-tor	Political/ Stake-holder	Ad min	Overa ll	Political/ Stake-holder	Tech-nical	Depend-ence	Overall	Cat	Qua d	Rel/Bl d	Priority
96. Partial	Integrate with RITIS – RITIS, when mature, may serve as a single interface to the following systems: Regional 911, IEN, CAPWIN, EMMA/MEGIN, WebEOC, 511	H	H	M	H-	H	H	H	H	C2C	II	3.2/3.3 /5/6	15
109.	Enhance communications log; filters on event comm log	M	N/A	M	M	N/A	L+	L	L	GUI	III	3.2	24
110.	Add capability to automatically generate reminders associated with the scheduler	M	N/A	M	M	N/A	M	H	M+	Sche	II	3.2	14
125.	Ability to handle public/private data sharing requirements	L	H	M	M	H	M	H	H-	C2C	IV	3.2/3.3	18
6.	Integrate Device Status web page with CHART (1.5.3, 1.5.4; 4.2.1.3)	H	n/a	H	H	n/a	H	H	H	S&D	II	4	42
126	CHART Maintenance GUI	M	M	H	M+	M	M	L	M-	GUI	II	4/5	
107 Partial	Improve map data granularity: cross streets, bridges, emergency response facilities, etc.	H	N/A	M	M+	M	M	H	H-	Map	II	5/6/7	32
48. Partial	CHART Services; health status notification, self-healing, stats (7.3)	L	n/a	H	M	n/a	H	H	H	S&D	IV	5,24	82
106.	Improve map lane configuration data; check for latest data, other data sets, etc.	H	N/A	M	M+	M	M	H	H-	Map	II	6	34

	Reqmt Desc.	Op era-tor	Political/ Stake-holder	Ad min	Overa ll	Political/ Stake-holder	Tech-nical	Depend-ence	Overall	Cat	Qua d	Rel/Bl d	Priority
111.	EORS integration phase 1 - event management	M	M	M	M	H	H	H	H	EOR S	II	6	63
98.	Integrate CHART map and provide single map interface	H	L	H	H-	N/A	H	H	H	Map	II	6/7	33
4.	Note pad controls and formatting features (Wiki, or third party alternative) (1.4.3)	H	n/a	H	H	n/a	H	L	M	GUI	I	7	23
22.	Events – auto capture day, date/time, weather conditions, source (4.1.1.2 – 4.1.1.4). Note: Dependence on SCAN integration	H	n/a	H	H	n/a	H	H	H	EOR S	II	7	30
90.	Integrate SCAN	L	M	M	M	M	M+	M	M	EOR S	III	7	31
42.	Camera control - video upgrades to implement full camera command set.	M	M	M	M	L	H	M	M	CCT V	III	7/8	26
116.	Incorporate NTCIP-compliant cameras, detectors, HARs, and DMSes.	L	M	M+	M	M	M+	H	M+	DC	II	7/8/9	25
40.	Camera control – additional controls to block (6.4). Maybe already done: “block to public” link.	n/a	n/a	n/a	n/a	n/a	n/a	n/a	n/a	CCT V	III	8	37
118. Parti al	Integrate AVL.	H	H	M	H-	H	H	H	H	Track	II	11/14	70
88. Partial	Integrate with other local and regional CCTV systems	H	H	H	H	H	M	H	H-	CCT V	II	7/15	21

	Reqmt Desc.	Op era-tor	Political/ Stake-holder	Ad min	Overa ll	Political/ Stake-holder	Tech-nical	Depend-ence	Overall	Cat	Qua d	Rel/Bl d	Priority
24.	Decision Support Plans – generate event-specific plan (4.1.2.2) Partial Phase 1	H	M	H	H-	M	M+	H	H-	DS	II	9/10/ 11/13	52
25.	Decision Support Plans – modify event-specific plan (4.1.2.3) (assumes 4.1.2.2 is done) Partial Phase 1	H	M	H	H-	M	L	H	H-	DS	II	9/10/ 11/13	50
26.	Decision Support Plans – execute event-specific plan (activate devices, issue notifications, etc.) (4.1.2.4) assumes 4.1.2.3 is done)	H	M	H	H-	M	L	H	H-	DS	II	9/10/ 11/13	53
19. Partial	Alerts – From external systems (3.4)	H	L	H	H	M	M+	H	H-	Alerts	II	9/13	
44. Partial	Additional video enhancements, i.e., temporary tours, scheduled displays, temporary presets, privacy zones, etc.	H	M	M	M+	N/A	H	M	M+	CCT V	II	10/11	35
45. Partial	Enhanced video tours	M	M	M	M	N/A	M	M	M	CCT V	III	10/11	38
8. Partial	Decision Support Plans – automated (2.1) (R4B1,)	H	M	H	H-	M	M+	M+	M+	DS	II	10/11/ 12	56
1.	Areas of responsibility, – Defined geographies to facilitate assignments for devices and organizations (e.g., District 3 office, MSP barracks, TOC3) (1.1.1.1, 1.1.1.2, 1.2) – SHOULD BE IN EXISTING REQUIREMENTS; integrating geolocation into CHART. Needs to be chunked into phases	H	M	M	M+	M	H	H	M+	AOR	II	10/12	29

	Reqmt Desc.	Op era-tor	Political/ Stake-holder	Ad min	Overa ll	Political/ Stake-holder	Tech-nical	Depend-ence	Overall	Cat	Qua d	Rel/Bl d	Priority
13	Travel time – identify roadways and sensors (2.3.2)	H	H	M	H-	H	M	H	H-	Trave l	II	3.3/10	59
36.	Travel times – calculate (5.3)	L	H	L	M-	n/a	L	H	M	Trave l	III	3.3/10	60
12.	Emergency evacuation routes and alternate routes in CHART (2.3.1)	H	H	M-	H-	H	M	M	M+	DS	II	11	41
41.	Camera control - video upgrades for privacy zones, block when MSP takes control.	M	M	M	M	L	M	L	L+	CCT V	III	11/12	36
37.	Travel times – display on signs and website; broadcast via HAR (6). Depends on device blanking and arbitration queue	M	H	M	M+	M	M	H	M+	Trave l	II	11/12	57
28.	Decision Support Plans – Update on device status, resource status change (4.2.1.2)	H	M	H	H-	M	M+	H	H-	DS	II	11/12	54
118.	Integrate AVL.	H	H	M	H-	H	H	H	H	Track	II	11/14	70
89. Partial	Integrate with Signal shop systems	L	H	M	M	H	H	H	H	Signa l	IV	11/15	44
43. Partial	Video distribution to the desktop	M	M	M	M	M	H	H	H-	CCT V	IV	9/12	61
92. Partial	Integrate with regional 911/CAD systems	H	H	M	H-	M	M	M	M	C2C	I	12	28

	Reqmt Desc.	Op era-tor	Political/ Stake-holder	Ad min	Overa ll	Political/ Stake-holder	Tech-nical	Depend-ence	Overall	Cat	Qua d	Rel/Bl d	Priority
9. Partial	Decision Support Plans – simulation (2.2)	H	L	H	M	L	H	H	H	DS	IV	12	67
102. Partial	Integrate with regional 511 systems	N/A	H	M	M+	H	M	H	H-	511	II	12/TBD	20
3.	Single sign-on for CHART, map, paging, and EORS (1.4.1)	H	n/a	M+	M+	n/a	M	H	M+	L	II	TBD	
112.	EORS integration phase 2 – all remaining functions	M	M	M	M	H	H	H	H	EORS	IV	14	62
38.	Queue length – display on signs and website; broadcast via HAR (6)	M	H	M	M+	M	M	H	M+	Travel	II	TBD	58
30.	Calculate queue length (4.2.3)	L	H	L	M-	n/a	H	H	H	Travel	IV	14	72
10.	FITMs in CHART – modifiable for event (2.3.1)	M	L	M	M	L	H	L	M-	DS	III	TBD	40
11.	FITMs in CHART – read-only pdf (2.3.1); identify closest FITM pdf for an event. Dependence on areas of responsibility	H	L	M	M	L	M	M+	M	DS	I	13	39
97.	Data exchange with EMMA/MEGIN	L	H	M	M	H	H	H	H	C2C	II	TBD	22

	Reqmt Desc.	Op era-tor	Political/ Stake-holder	Ad min	Overa ll	Political/ Stake-holder	Tech-nical	Depend-ence	Overall	Cat	Qua d	Rel/Bl d	Priority
29.	Signal controls – CHART-based signal shop notifications and confirmation of response actions (4.2.3); assumes notifications are implemented	M	H	M	M+	H	L	M	M	Signa l	I	TBD	46
34.	Signal control – integrated with CHART, decision support recommendations (5.1)	M	H	M	M+	H	H	H	H	Signa l	II	TBD	43
49.	Data from devices and device status (7.3.1 – 7.3.4, 7.3.6). Dependent on Integrate Device Status web page with CHART (1.5.3, 1.5.4; 4.2.1.3), but also includes data validation and error-checking, comparison of data from different device outputs (e.g, speed detectors vs. traffic counters)	M	M	H	M+	L	H	H	H-	S&D	II	TBD	48
108.	Include SOPs into CHART user application	M	N/A	M	M	N/A	L+	L	L	GUI	III	14	55
121.	Integrate wireless mobile cameras	L	H	M	M	M	H	H	H	Track	IV		
31.	Signal control adjustment decision support during an event (4.2.3)	M	H	M	M+	H	M+	H	H-	Signa l	II	TBD	45
35.	Alternate route recommendations for congestion (5.2)	M	H	M	M+	n/a	M	L	L+	DS	I	TBD	51
112. Partial	EORS integration phase 2 – all remaining functions	M	M	M	M	H	H	H	H	EOR S	IV	TBD	62

	Reqmt Desc.	Op era-tor	Political/ Stake-holder	Ad min	Overa ll	Political/ Stake-holder	Tech-nical	Depend-ence	Overall	Cat	Qua d	Rel/Bl d	Priority
5. Partial	Emergency logout and resource transfer feature (1.4.5)	L	n/a	H	M	n/a	L	M	L+	GUI	III	18	64
51.	Simulation – Offline mode (7.4)	L	M	H	M	M	H	H	H	Sim	IV	TBD	65
52.	Simulation – Training mode (7.4)	H	M	M	M+	M	H	H	H	Sim	II	TBD	66
53.	Simulation – Decision support testing mode (7.4)	L	M	H	M	M	H	H	H	Sim	IV	TBD	68
50.	Simulation – Real-time mode (7.4)	H	M	M	M-	M	H	H	H	Sim	IV	TBD 1	69
2. OBE	Sys admin control for map/layer download and edit (1.3)	L	n/a	H	M	H	M	L	M	Map	III	21	71
27.	Status of Maintenance shop personnel and equipment (4.2.1.1)	H	H	H	H	H	H	H	H	Equip	II	22 EORS	73
91.	Integrate EMNet	L	H	M	M	H	M	H	H-	C2C	IV	TBD	76
124. Partial	Provide support to hand-held devices for field support and management info	M	M	M+	M	L	M	L	M-	L	IV	4 /22	78
120. OBE	Integrate Cell Phone/GPS Tracking	L	H	M	M	H	H	H	H	Track	IV	23	74
122.	Integrate VII technologies	L	H	M	M	H	H	H	H	Track	IV	TBD	75

	Reqmt Desc.	Op era-tor	Political/ Stake-holder	Ad min	Overa ll	Political/ Stake-holder	Tech-nical	Depend-ence	Overall	Cat	Qua d	Rel/Bl d	Priority
104.	Integrate/improve reversible lane control systems	M	L	L	L+	N/A	M	M	M	DC	III	TBD	77
119.	Integrate Toll Tag Tracking	L	H	M	M	H	M	L	M	Track	III	13	79
101. OBE	Integrate with CVISN	L	L	L	L	N/A	M	L	L+	C2C	III		81
48. Partial	CHART Services; health status notification, self-healing, stats (7.3)	L	n/a	H	M	n/a	H	H	H	S&D	IV	4, ,24	82
123.	Integrate with parking management systems	L	H	M	M	M	H	H	H	Park	IV	TBD	80
47. Partial OBE	Reports –automatically generate reports (scheduler for reports) . Requires either integration of CHART reporting tool or move those features into CHART	L	M+	H	M+	M	H	H	H	Repo rts	II	25	83
33. OBE	Reports – Automatically generated post-event analysis (4.3.5). Requires either integration of CHART reporting tool or move those features into CHART	L	M+	H	M+	M	H	H	H	Repo rts	Ii	25	84
46. OBE	Archive management (7)	n/a	M	M	M	L	L	L	M	Repo rts	III	25	85
113. Partial	Integrate with internet video; possibly provide link; investigate feasibility	H	H	H	H	M+	M	L	M	CCT V	I		8

	Reqmt Desc.	Op era-tor	Political/ Stake-holder	Ad min	Overa ll	Political/ Stake-holder	Tech-nical	Depend-ence	Overall	Cat	Qua d	Rel/Bl d	Priority
100. Partial	Integrate with WebEOC	L	H	M	M	M	M	M	M	C2C	IV	EOR S	16
94. OBE	Integrate IEN/TRANSCOM data	L	H	M	M	M	M	M	M	C2C	III		19
117.	Incorporate additional device status and control capabilities into CHART	L	M	M+	M	M	M+	H	M+	DC	II	10	
57.	Identify dedicated CHART "ambassadors" to interface with key stakeholders on a regular basis	n/a	H	n/a	H	M	n/a	n/a	M	I	3		
58.	Develop clear protocols for managing shared events and communicate them to operators and field responders for SOC, TOCs, and AOC.	M	H	H	H-	M+	n/a	H	H-	II			
59.	Develop improved working relationship and clear protocols with signal shop for adjusting signal timing and monitoring the effectiveness of signal adjustments during an event.	M	M	M	M	H	n/a	M	H-	II			
60.	Visibility into maintenance shop assets (equipment/vehicles)	M	M	M	M	H	M+	M+	M+	II		EOR S	
61. OBE	Improve retention – implement explicit mentoring program for new HOTs	H	n/a	H	H	n/a	n/a	M	L	I	3		

	Reqmt Desc.	Op era-tor	Political/ Stake-holder	Ad min	Overa ll	Political/ Stake-holder	Tech-nical	Depend-ence	Overall	Cat	Qua d	Rel/Bl d	Priority
62.	Improve retention – implement suggested minimum observation time in SOC as part of hiring process	H	n/a	H	H	n/a	L	n/a	L	I	3		
63. OBE	Improve retention – implement round table interviews (vs. one-on-one)	H	n/a	H	H	n/a	L	M-	M-	II	3		
64. OBE	Improve retention – evaluate feasibility of pilot program for different types of shifts	H	n/a	H	H	M	H	M	M+	II	3		
65. OBE	Improve retention – identify and evaluate feasibility of non-monetary benefits (e.g., daycare)	H	n/a	H	H	H	L	H	M+	II	4		
66.	Training – validate requirements for new/revised training programs and develop training development plan	H	n/a	H	H	L	L	L	L	I	3		
67.	Training – develop and deliver Basic CHART training program (functional and application-based).	H	n/a	M	H-	n/a	M	M	M	II	3		
68.	Training – develop and deliver application-based training for Advanced Event Management and Special Event Management	H	n/a	M	M+	n/a	M	M	M	II	3		
69.	Training – develop and deliver application-based training for Reporting and System Administration	H	n/a	H	H	n/a	M	M	M	II	4		
70.	Staffing expansion – 3 operators per shift; especially when TOCs are closed	H	n/a	H	H	H	H	M	H-	II	3		
71.	Staffing expansion – TOC 7	H	n/a	H	H	H	H	M	H-	II	3		

	Reqmt Desc.	Op era-tor	Political/ Stake-holder	Ad min	Overa ll	Political/ Stake-holder	Tech-nical	Depend-ence	Overall	Cat	Qua d	Rel/Bl d	Priority
75.	Facility, expansion – TOC 7	M	L	L	L+	H	M	n/a	M+	IV	5		
76.	Facility, new – TOC 1, Eastern Shore	M	L	L	L+	H	M	n/a	M+	IV	5	TBD	
77. Partial	Facility, new – TOC 6, Allegany County	M	L	L	L+	H	M	n/a	M+	IV	5		
78.	Facility, improved work space design at police barracks and district offices	H	L	L	M-	H	M	n/a	M+	IV	5		
79. Partial	Field operations depot	M	L	L	M-	H	H	M	H-	IV	5		
80. Partial	Devices - increase number of locations by leveraging more privately or regionally owned device output (e.g., cameras, detectors, sensors)	n/a	H	M	M+	H	H	H	H	II	4		
81.	Devices – increase coverage to less-populated areas	n/a	H	M	M+	M	M	L	M-	II	3		
82.	Devices – increase coverage by re-using existing infrastructure for new devices (e.g., radio towers, old Whellan detector locations)	n/a	H	M	M+	H	H	H	H	II	4		
87.	Integrate with other MDOT CCTV systems	H	H	H	H	H	H	H	H	CCTV	II	TBD	
95.	Integrate CAPWIN chat/paging data	L	H	M	M	M	M	M	M	C2C	III	TBD	

A.2 Mid-level Process Requirements

This list of mid-level requirements was derived from the analysis of the business process descriptions and other workshop notes. All other mid-level requirements (for all the other non-Process areas; OLDAT) are listed in the each sections' Recommendations subsection (last subsection). Because this list is so long, it is included in this appendix.

Note: The parenthetical numbers at the end of each Requirement Description refer to the corresponding business process number (refer to Section 4.3 and Appendix B).

Rqmt #	Requirement Description
1.	Areas of responsibility, – Defined geographies to facilitate assignments for devices and organizations (e.g., District 3 office, MSP barracks, TOC3) (1.1.1.1, 1.1.1.2, 1.2) – SHOULD BE IN EXISTING REQUIREMENTS; integrating geolocation into CHART. Needs to be chunked into phases
2.	Sys admin control for map/layer download and edit (1.3)
3.	Single sign-on for CHART, map, paging, and EORS (1.4.1)
4.	Note pad controls and formatting features (Wiki, or third party alternative) (1.4.3)
5.	Emergency logout and resource transfer feature (1.4.5)
6.	Integrate Device Status web page with CHART (1.5.3, 1.5.4; 4.2.1.3)
7.	Decision Support Plans – document-based (2.1)
8.	Decision Support Plans – automated (2.1) (R4B1, please)
9.	Decision Support Plans – simulation (2.2)
10.	FITMs in CHART – modifiable for event (2.3.1)
11.	FITMs in CHART – read-only pdf (2.3.1); identify closest FITM pdf for an event. Dependence on areas of responsibility
12.	Emergency evacuation routes and alternate routes in CHART (2.3.1)
13.	Travel time – identify roadways and sensors (2.3.2)
14.	Device plan, advanced sort and searching (2.3.3)
15.	Alerts – allow system admin to define conditions (2.4)
16.	Event scheduler (2.5)
17.	Alerts – Issue alerts (3.3)
18.	Alerts – Respond to alerts (3.4)
19.	Alerts – From external systems (3.4)
20.	Events – Open event user navigation; not tied to event type (4.1.1)
21*	Events - event location using pulldowns of known roads (4.1.1.1); especially pulldowns first
21.	Events - event location using map and pulldowns of known roads (4.1.1.1)
22.	Events – auto capture day, date/time, weather conditions, source (4.1.1.2 – 4.1.1.4). Note: Dependence on SCAN integration
23.	Events – dupe detection and merging (4.1.1.5), with 21*
24.	Decision Support Plans – generate event-specific plan (4.1.2.2)
25.	Decision Support Plans – modify event-specific plan (4.1.2.3) (assumes 4.1.2.2 is done)
26.	Decision Support Plans – execute event-specific plan (activate devices, issue notifications, etc.) (4.1.2.4) assumes 4.1.2.3 is done)
27.	Status of Maintenance shop personnel and equipment (4.2.1.1)
28.	Decision Support Plans – Update on device status, resource status change (4.2.1.2)
29.	Signal controls – CHART-based signal shop notifications and confirmation of response actions (4.2.3); assumes notifications are implemented
30.	Calculate queue length (4.2.3)

Rqmt #	Requirement Description
31.	Signal control adjustment decision support during an event (4.2.3)
32.	Events – change/transfer event type (4.3.3). Dependent on 4.1.1; could be done at the same time
33.	Reports – Automatically generated post-event analysis (4.3.5). Requires either integration of CHART reporting tool or move those features into CHART
34.	Signal control – integrated with CHART, decision support recommendations (5.1)
35.	Alternate route recommendations for congestion (5.2)
36.	Travel times – calculate (5.3)
37.	Travel times – display on signs and website; broadcast via HAR (6). Depends on device blanking and arbitration queue
38.	Queue length – display on signs and website; broadcast via HAR (6)
39.	511 info - Create templates and provide capability to dynamically update message content sent to 511 host (6.3)
40.	Camera control – additional controls to block (6.4). Maybe already done: “block to public” link.
41.	Camera control - video upgrades for privacy zones, block when MSP takes control.
42.	Camera control - video upgrades to implement full camera command set.
43.	Video distribution to the desktop
44.	Additional video enhancements, i.e., temporary tours, scheduled displays, temporary presets, privacy zones, etc.
45.	Enhanced video tours
46.	Archive management (7)
47.	Reports –automatically generate reports (scheduler for reports) (7). Requires either integration of CHART reporting tool or move those features into CHART
48.	CHART Services; health status notification, self-healing, stats (7.3)
49.	Data from devices and device status (7.3.1 – 7.3.4, 7.3.6). Dependent on Integrate Device Status web page with CHART (1.5.3, 1.5.4; 4.2.1.3), but also includes data validation and error-checking, comparison of data from different device outputs (e.g, speed detectors vs. traffic counters)
50.	Simulation – Real-time mode (7.4)
51.	Simulation – Offline mode (7.4)
52.	Simulation – Training mode (7.4)
53.	Simulation – Decision support testing mode (7.4)

A.3 Other Suggestions

In addition to the mid-level requirements that were addressed in the CHART System Release Plan, several other specific suggestions were captured during as the workshops. These were considered as a part of the Release Strategy and will be reviewed during the requirements analysis phase of each release and build. As necessary, some suggestions will be recorded as a part of the "enhancements" tracking process used on CHART. They are classified by the four primary categories of change defined in the Application Section 8.3: usability, automation, integration, and intelligence. Those highlighted in Green have already been completed

Usability

- Manipulate multiple DMSs and HARs at the same time in plans.
- Provide views into the communications/event history logs that filters out system generated messages, view summary messages for a particular sign (e.g., when did the message go up?), see or highlight operator generated messages.
- Add MdTA facilities one/two lane ramps to event lane configuration.
- Add links to SOPs (e.g., the SOP for Amber alert).
- Update route search on map to avoid having to look up routes elsewhere.
- Address page refresh annoyances (refresh while typing makes you lose your spot).
- Provide a draft or template capability
- Don't show maintenance mode devices on the home page.
- Investigate customized homepage options like hiding all action construction events (e.g., too many events during a hurricane can't find what you need). Balance this will need to show operators everything (perhaps reset next time you log in so you see everything at first, then hide what you don't want to see).
- Add recently viewed cameras to left frame of the main GUI page.
- Have left frame hide unless mouse-over.
- Update recently viewed events list to show only opened events.
- Provide event location via the map and via drop down lists
- Provide location aliases that automatically populates fields: county, etc. .
- Enhance map to provide enough intersections to remove free form text location
- Allow event type transition (e.g., Roadwork Event ---> Congestion)
- Don't allow event name to be removed (blank).
- Vehicle change info should not be a popup. Currently can do arrive and depart, but not the rest.
- Disabled vehicle info for already opened event should be check boxes not a new window like participants.
- General Info delayed cleared should have a checkbox.
- Add US Park Police to list of resources.
- Review all check boxes for Action events. Add citizen complaint.
- Add scanner or fireboard to source list.
- Add ability for administrator to edit the source list.
- Investigate allowing two locations for one event.
- Allow flagging operation/reversible lane direction (e.g., Nice Bridge, tunnels)

- Add MdTA facility configuration
- Allow users to mark something is wrong.
- Require acknowledgement for shift hand-off report. Allow system administrator to create/modify this acknowledgment (e.g., to include a daily message).
- Allow one device message to be assigned to multiple devices.

Automation

The system should automatically do the following:

- Determine area of responsibility based on event location.
- Determine or allow the specification of related areas of responsibility so that notifications are sent to all responsible centers.
- Provide reminders for recurring tasks based on time of day
- Pre-populate lane configuration based on event location.
- Suggest the next tow truck to be assigned based on area
- Display the closest camera to a home monitor and start a control session (based on event type and location).
- Pan the closest in view camera toward the accident.
- Include a record of how a camera was used for an event
- Capture weather conditions as part of opening an event. Consider ability to hide this from the operator unless they want to see it.
- Provide links to relevant cameras and CHART partners based on event location.
- Identify and warn operators about duplicate events when opening a traffic event. Provide a visual indication of alerts no matter where you are on the page.
- Prompt operators to close roadwork events at the time the roadwork is scheduled to end.
- Close lanes, mark units departed, send out notifications upon event closure.
- Display the date/timestamp and userid who created a library entry, and the last time it was used. Same for dictionary entries and device plans.
- Implement additional message protocols and make necessary adjustments to arbitration queue.
- Consider displaying alerts as ticklers across the bottom of the page.

Integration

- Automatically create an Amber Alert event in CHART from EMNet, putting all signs in suggested formatted messages.
- Investigate the ability to incorporate cell phone or other camera snap shots into traffic events.
- Incorporate travel times as default messages on DMSs with appropriate arbitration queue priority so that travel time display does not interfere with incident management. Also, consider how to display travel time as part of event management to help ease congestion when motorists are informed of travel times.
- Capture and display CHART unit resource status. - Partial
- Assist with route and device ownership/responsibility.

- Provide a single-sign-on capability for CHART, CHART Mapping, EORS, etc.

Intelligence

- Automate SOPs and other routine regular tasks
- Remind operators at certain times or do specific tasks
- Pre-populate notification lists
- Consider tutorial mode vs. automatic
- Tell operators what signs to use, nearest cameras, suggest pre-stored plan(s) that might fit the situation, and whom to notify
- Key off of severe weather conditions.
- When going from 2 to 3 lanes closed, automatically suggest DMS messages w/# lanes closed updated and suggest including more DMSs farther away
- Prompt to send an image to suggested partners
- Use geo-location to suggest what events to associate with each other

Appendix B – Business Process Models

A business process modeling tool was used to capture the CHART process requirements. This appendix:

- Describes how to read these process models using the conventions enforced by that tool
- Presents the full series of process diagrams that correspond to each of the processes described in Section 4, Business Process Model.

Introduction to IDEF0 Process Model Conventions

There are many process modeling conventions in industry use today. One popular method (and a Federal government standard) is the IDEF0 modeling technique. IDEF is a concatenation of the phrase **I**ntegrated Computer Aided Manufacturing **Def**inition Language. There are multiple IDEF techniques; IDEF0 is for process modeling, IDEF1X is for data modeling, and IDEF3 is for workflow modeling. The IDEF0 process modeling technique was used for this project to define and decompose the Accounting and Reporting processes and the Financial Analysis Processes (high-level only).

An IDEF0 model starts with a high-level context diagram. This diagram is then "decomposed" (or subdivided) into subprocesses in a hierarchical manner (see figure below) with each box representing a business process.

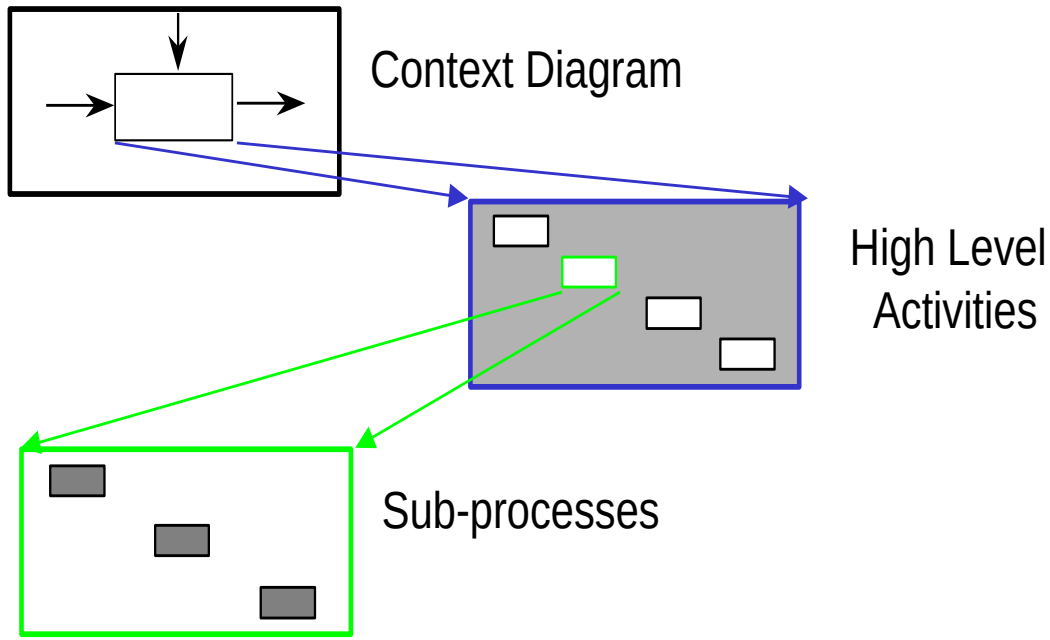

IDEF0 Process Modeling Decomposition Example

The subprocesses of any process are displayed on separate pages of the model, and can be identified by the process number in the lower left corner of each process box and in the title block at the bottom of the model page..

Each diagram (page) in a model is read in a left-to-right manner. Each diagram includes arrows that represent the flow of data through the processes. There are four arrow types -- Inputs, Controls, Outputs, and Mechanisms (collectively known as ICOMs) --- associated with the diagrammed activities identify information or items used in or produced by an activity. The definitions for these arrow types are listed below and shown on the following figures.

- **Input** - an arrow entering the **left side** of an activity box. Inputs are information or materials transformed or consumed in the production of the outputs of the activity
- **Control** - an arrow entering the **top** of an activity box. Controls are information or materials that govern, constrain, or trigger the operation of an activity. Controls regulate the transformation of inputs to outputs.
- **Outputs** - an arrow leaving the **right side** of the activity box. Outputs are information or materials produced by an activity or resulting from an activity.
- **Mechanism** - an arrow entering the **bottom** of an activity box. Mechanisms are people or existing systems that perform or enable an activity.

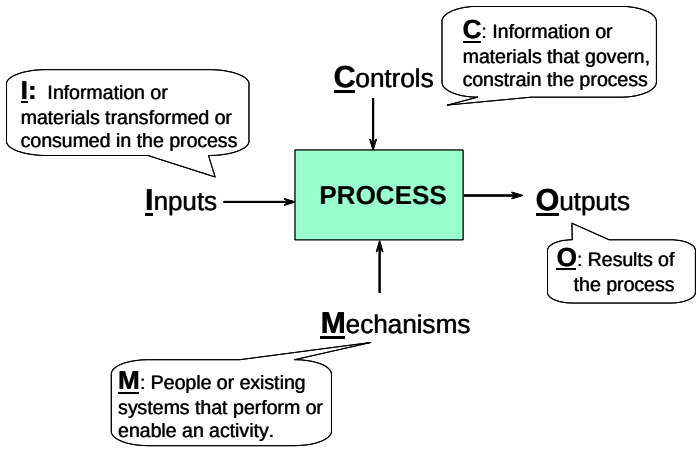

IDEF0 Arrow Types - ICOMS

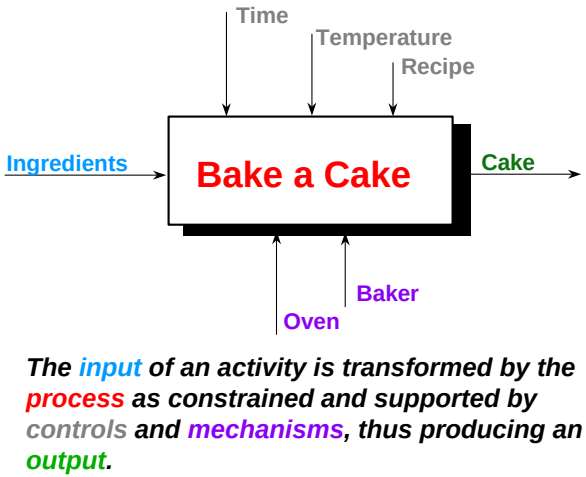

The input of an activity is transformed by the process as constrained and supported by controls and mechanisms, thus producing an output.

IDEF0 Process Model ICOM Example

CHART Business Process Models

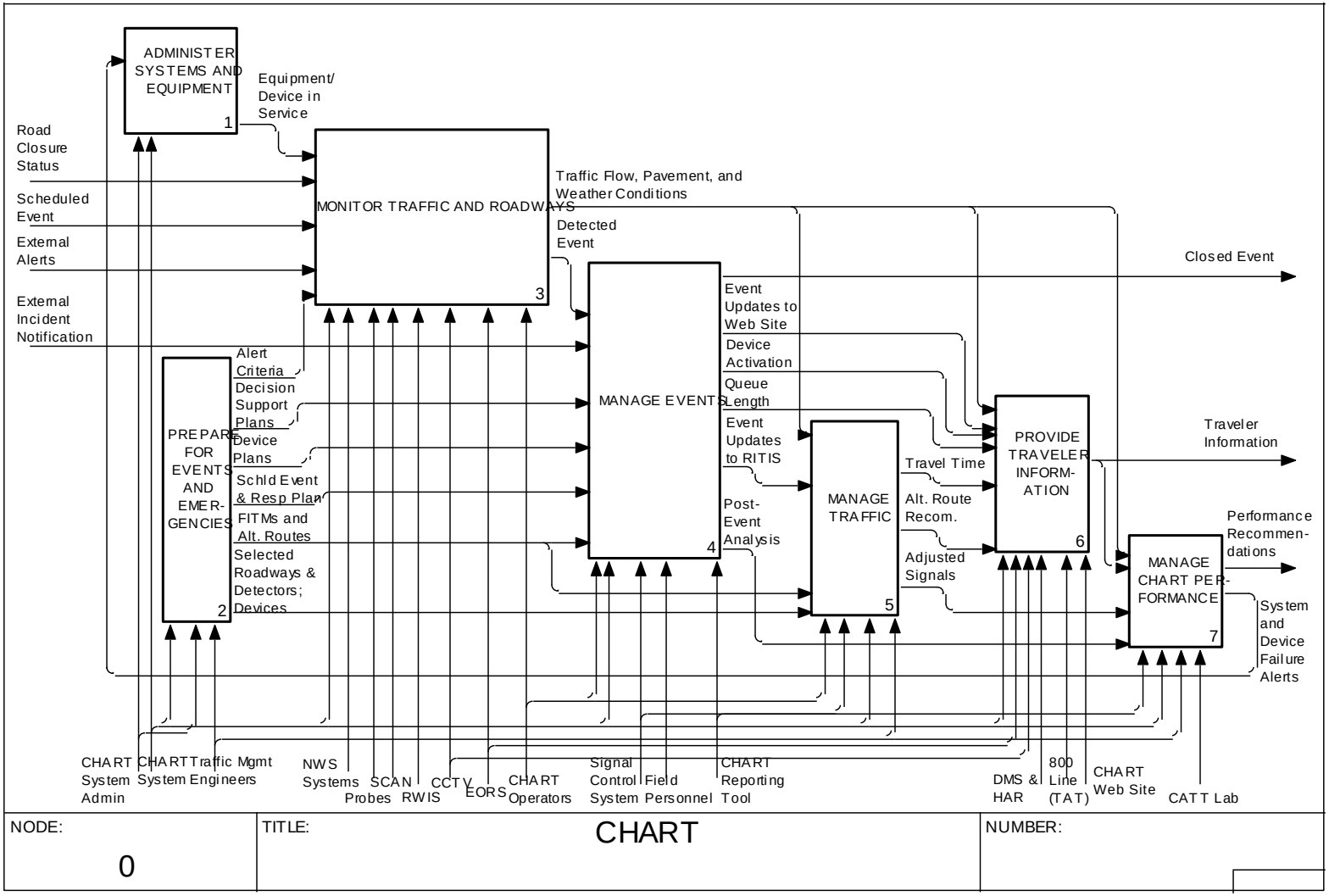

NODE:	TITLE:	NUMBER:
0	CHART	

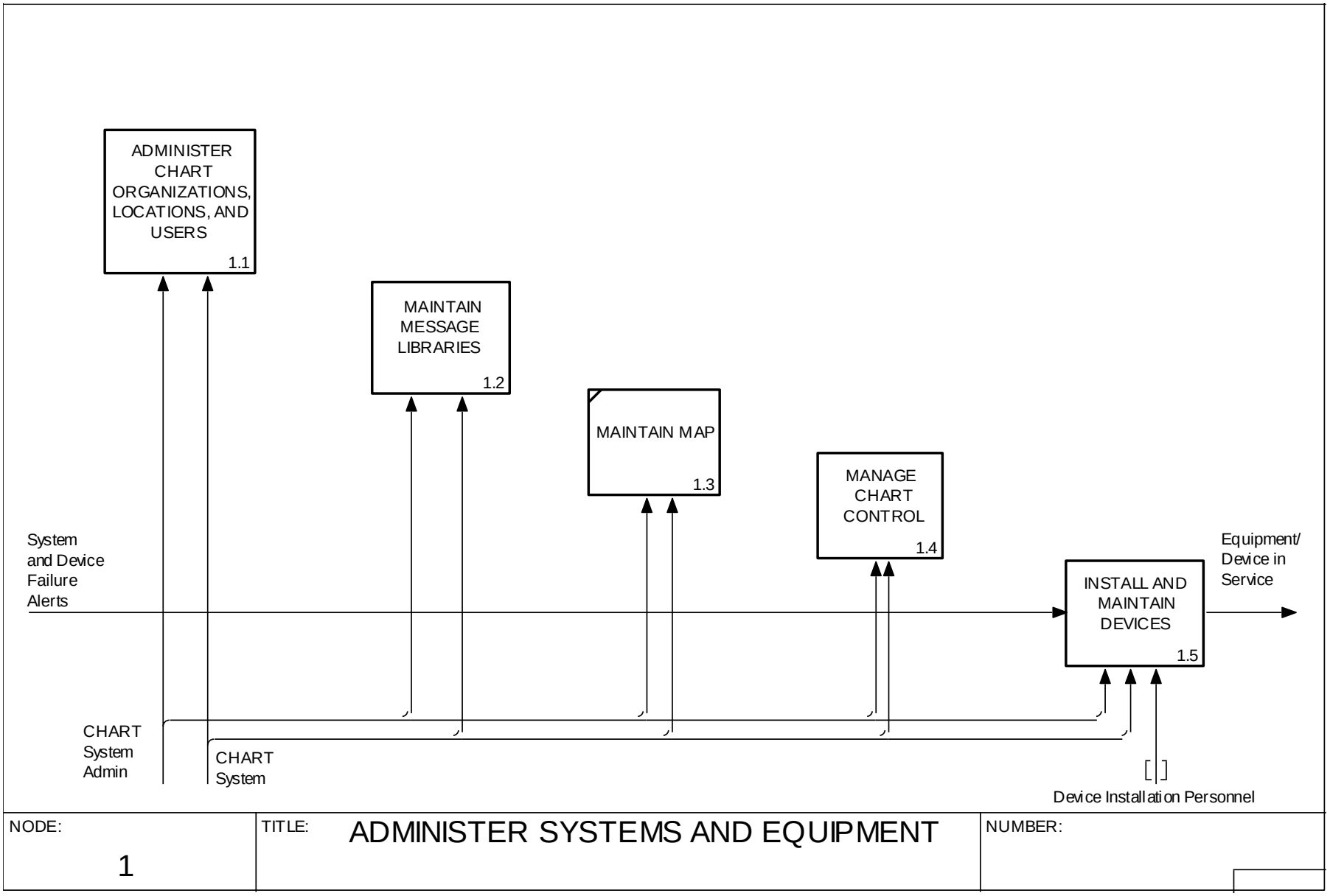
ADMINISTER CHART ORGANIZATIONS, LOCATIONS, AND USERS
1.1
MAINTAIN MESSAGE LIBRARIES
1.2
MAINTAIN MAP
1.3
MANAGE CHART CONTROL
1.4
INSTALL AND MAINTAIN DEVICES
1.5
System and Device Failure Alerts
Equipment/ Device in Service
CHART System Admin
CHART System
Device Installation Personnel
NODE:
1
TITLE:
ADMINISTER SYSTEMS AND EQUIPMENT
NUMBER:

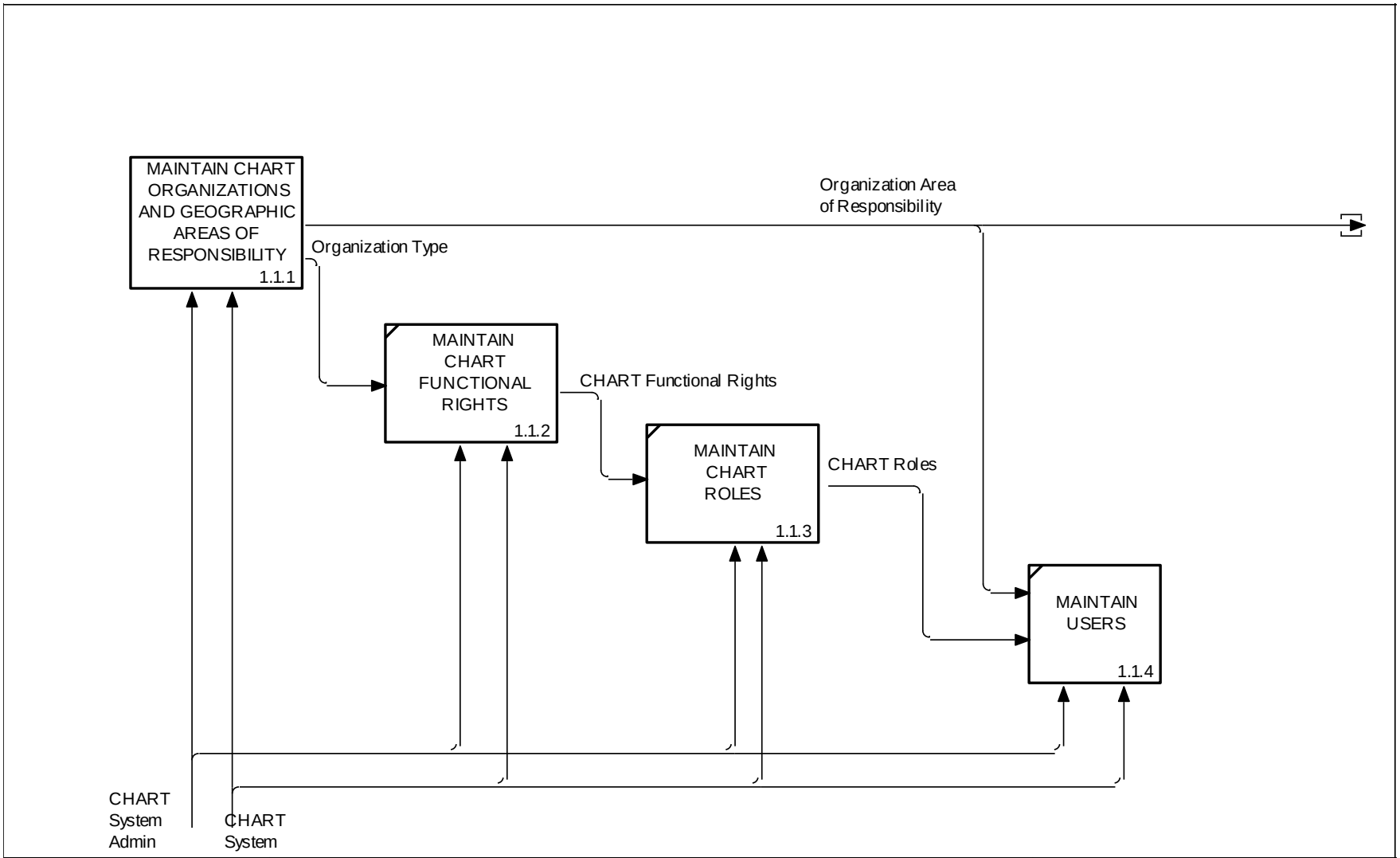

NODE:	TITLE:	NUMBER:
1.1	ADMINISTER CHART ORGANIZATIONS, LOCATIONS, AND USERS	

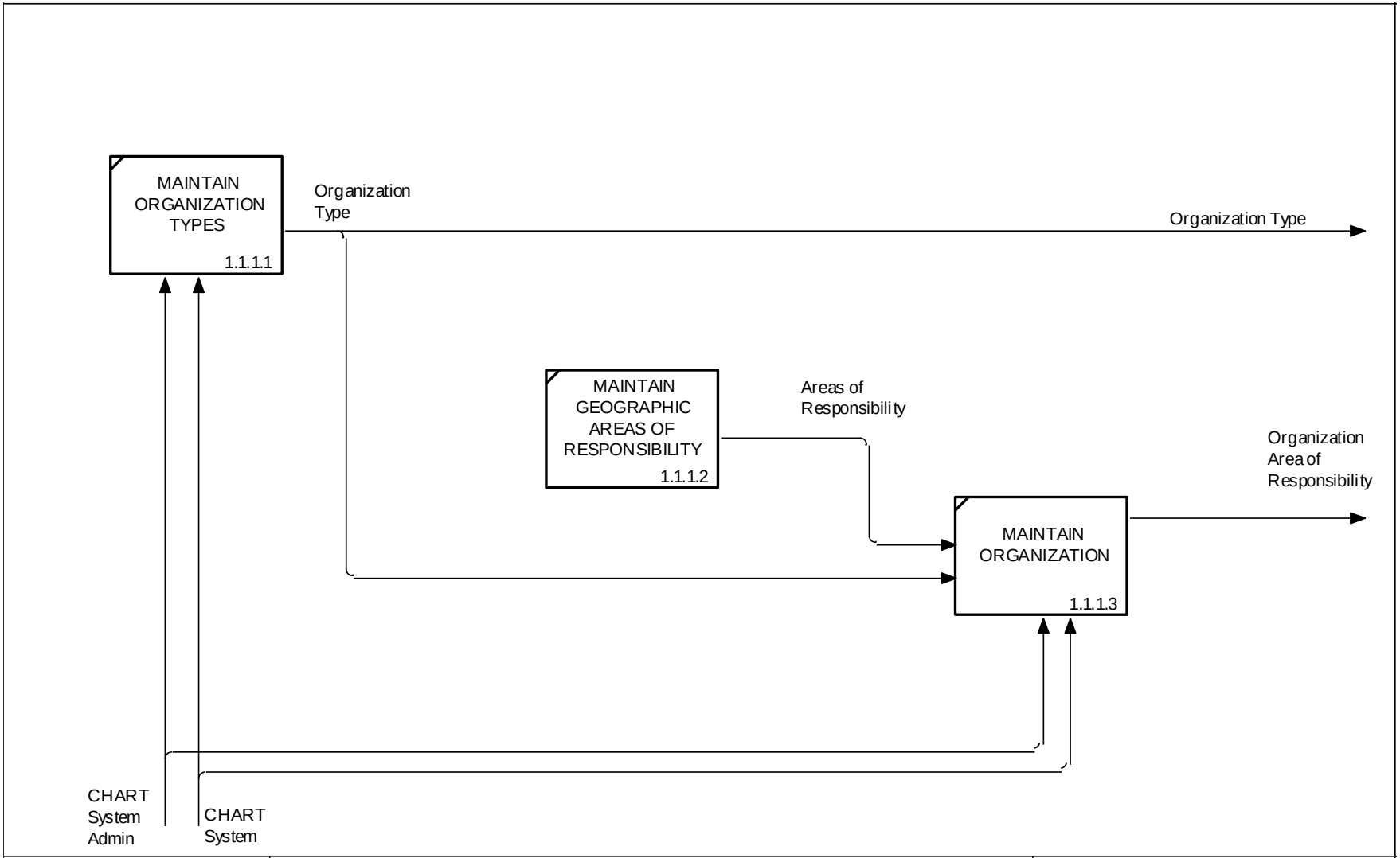

NODE:	TITLE:	NUMBER:
1.1.1	MAINTAIN CHART ORGANIZATIONS AND GEOGRAPHIC AREAS OF RESPONSIBILITY	

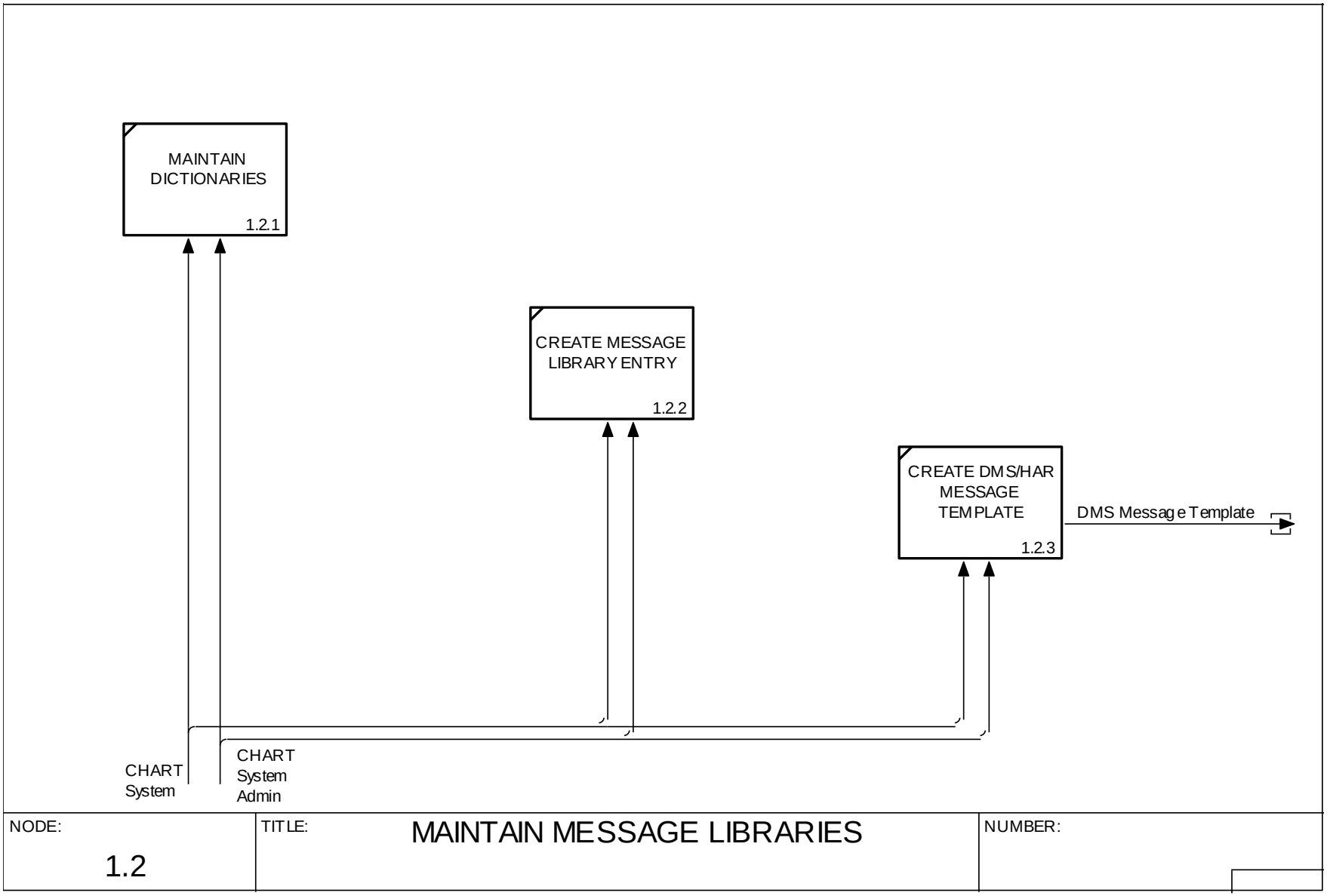
MAINTAIN DICTIONARIES
1.2.1
CREATE MESSAGE LIBRARY ENTRY
1.2.2
CREATE DMS/HAR MESSAGE TEMPLATE
1.2.3
DMS Message Template
CHART System
CHART System Admin
NODE:
1.2
TITLE:
MAINTAIN MESSAGE LIBRARIES
NUMBER:

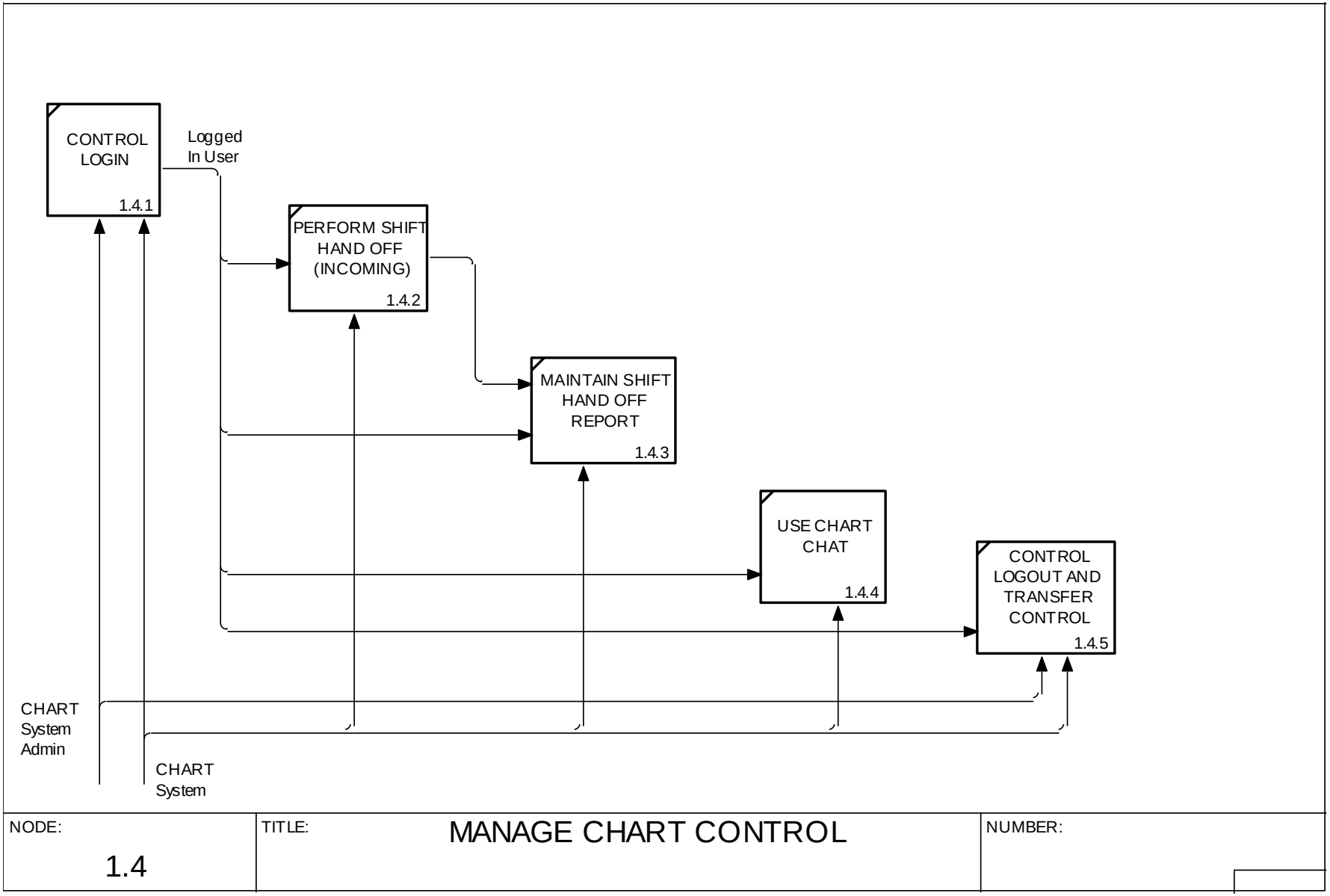
CONTROL LOGIN
1.4.1
Logged In User
PERFORM SHIFT HAND OFF (INCOMING)
1.4.2
MAINTAIN SHIFT HAND OFF REPORT
1.4.3
USE CHART CHAT
1.4.4
CONTROL LOGOUT AND TRANSFER CONTROL
1.4.5
CHART System Admin
CHART System
NODE:
1.4
TITLE:
MANAGE CHART CONTROL
NUMBER:

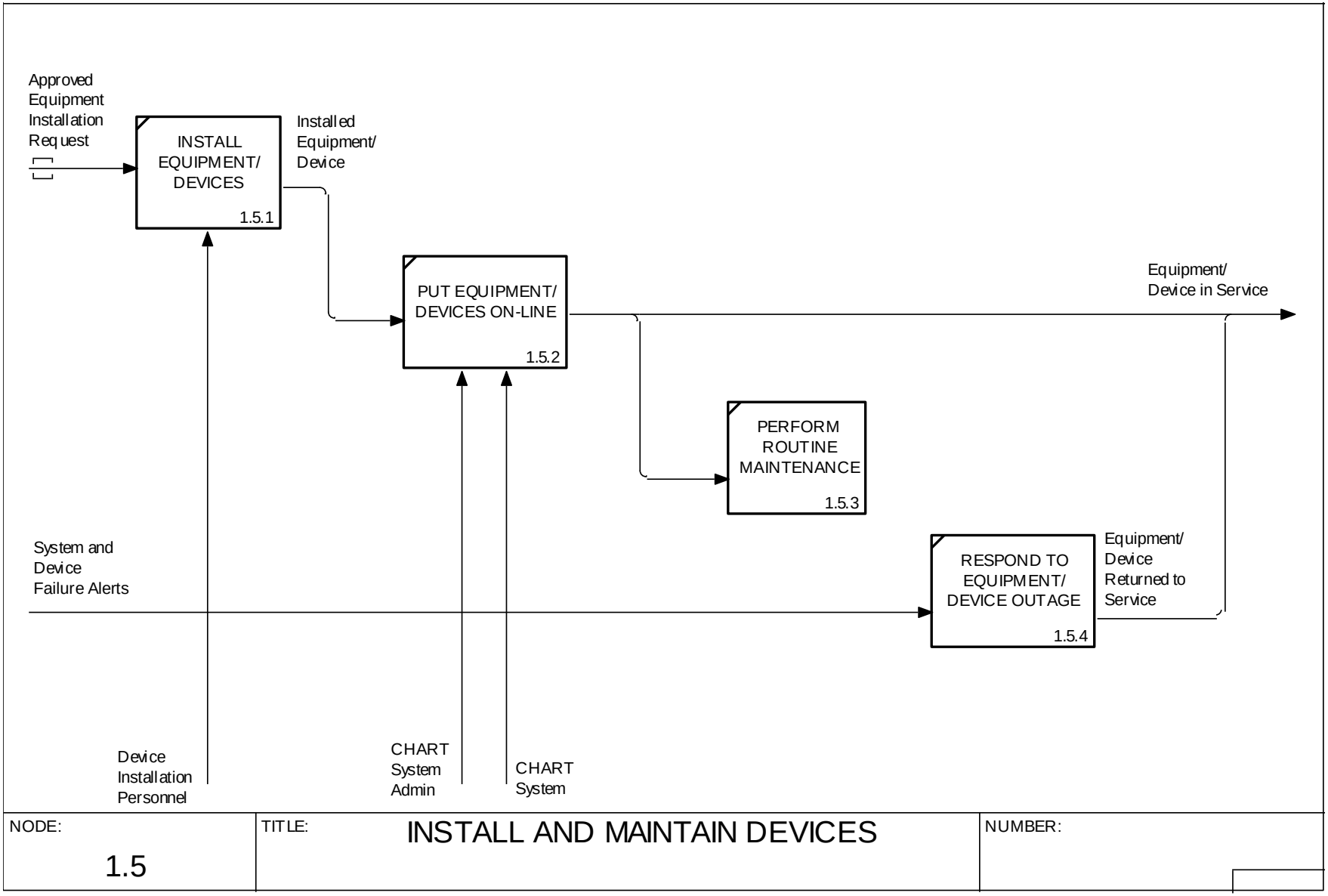
Approved Equipment Installation Request
INSTALL EQUIPMENT/ DEVICES
1.5.1
Installed Equipment/ Device
PUT EQUIPMENT/ DEVICES ON-LINE
1.5.2
Equipment/ Device in Service
PERFORM ROUTINE MAINTENANCE
1.5.3
System and Device Failure Alerts
RESPOND TO EQUIPMENT/ DEVICE OUTAGE
1.5.4
Equipment/ Device Returned to Service
Device Installation Personnel
CHART System Admin
CHART System
NODE:
1.5
TITLE:
INSTALL AND MAINTAIN DEVICES
NUMBER:

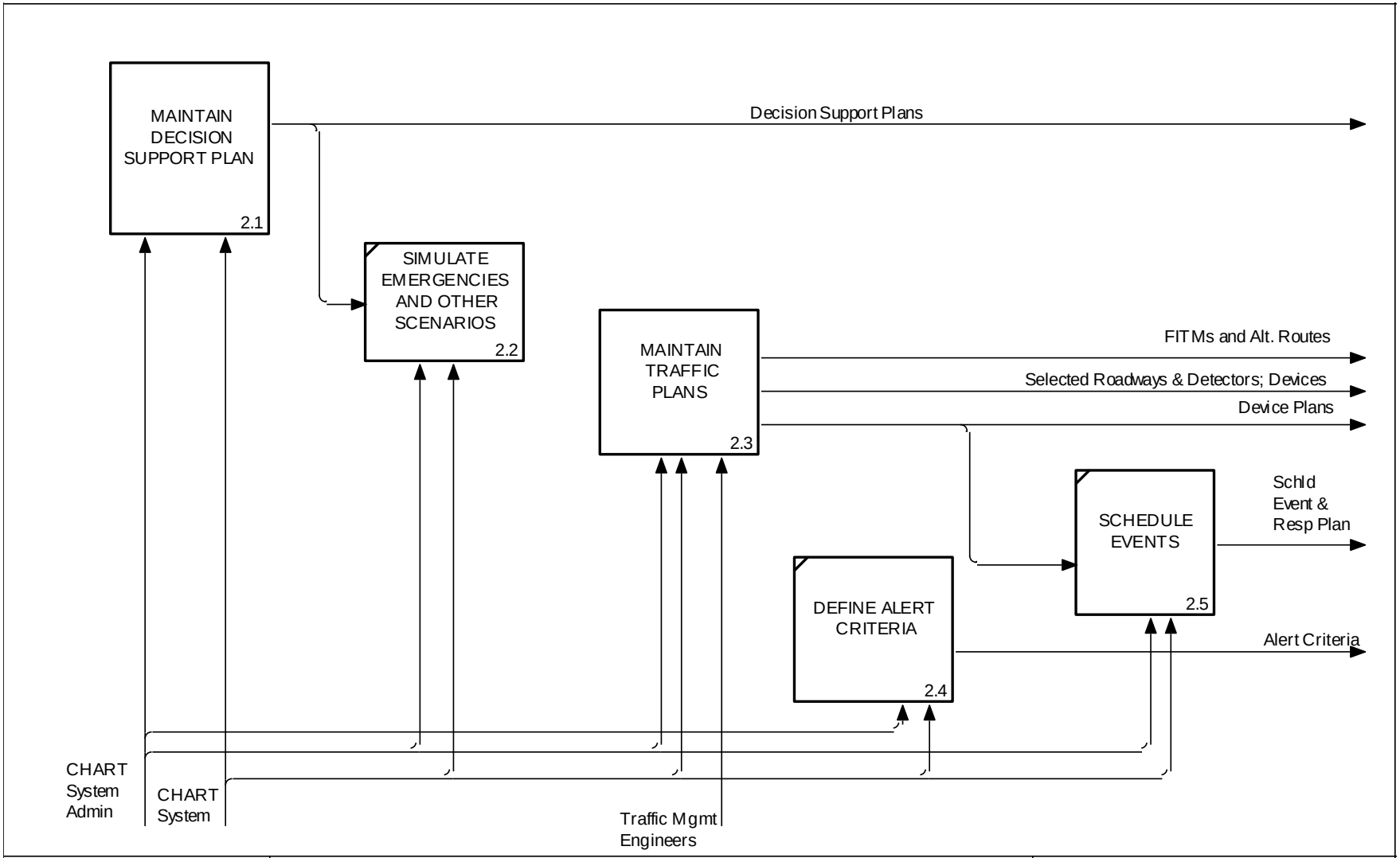

NODE:	TITLE:	NUMBER:
2	PREPARE FOR EVENTS AND EMERGENCIES	

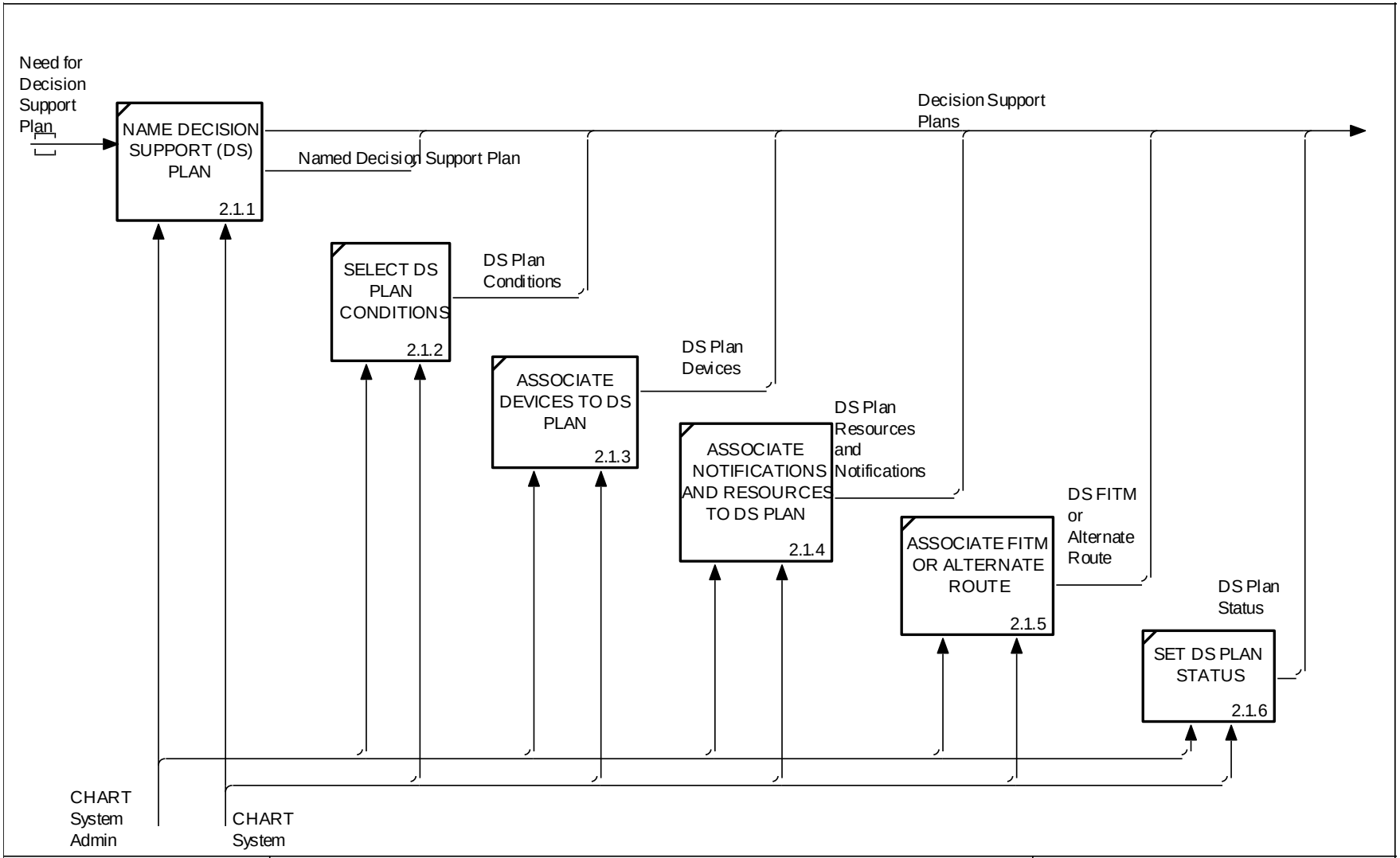

NODE:	TITLE:	NUMBER:
2.1	MAINTAIN DECISION SUPPORT PLAN	

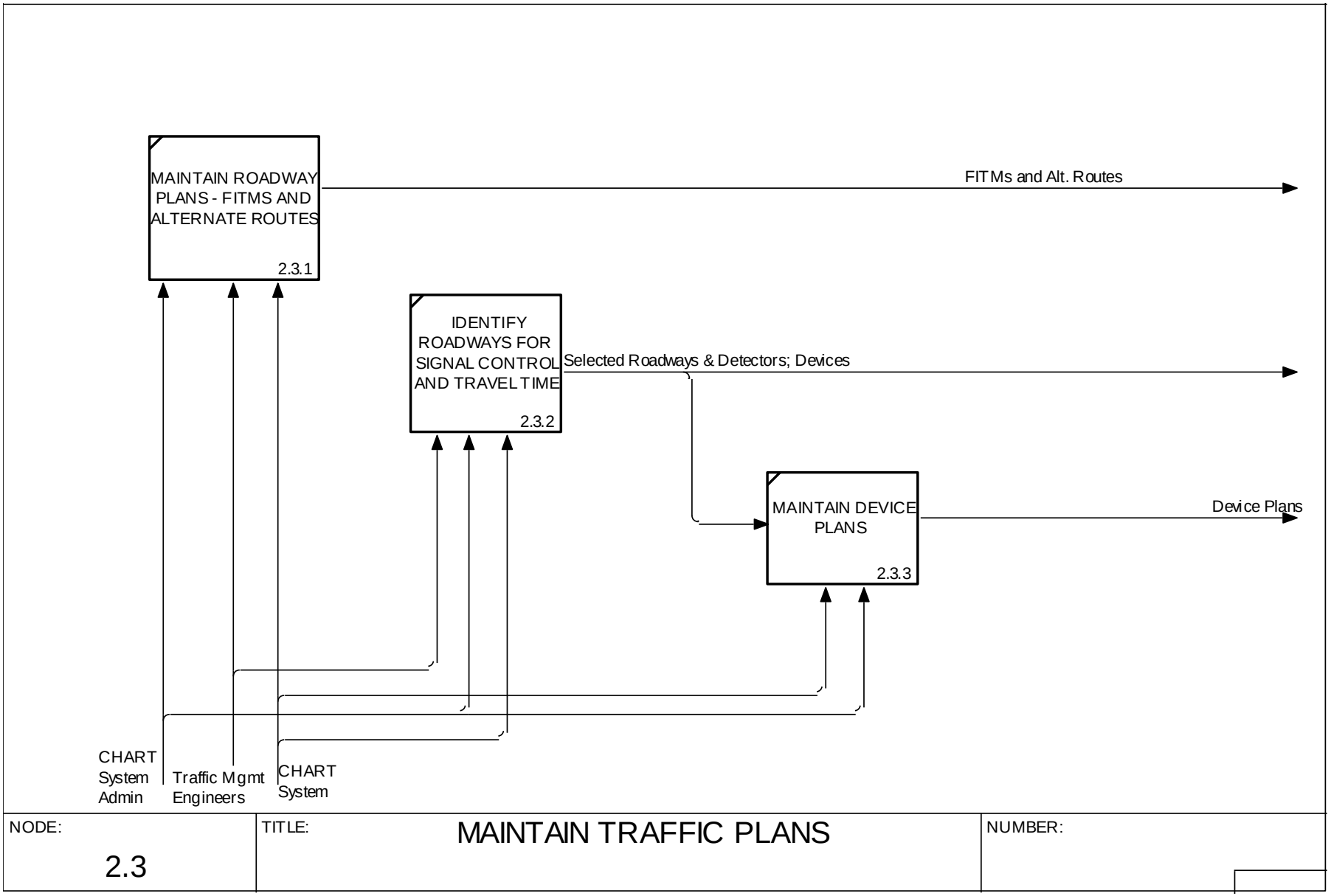
MAINTAIN ROADWAY PLANS - FITMS AND ALTERNATE ROUTES
2.3.1
FITMs and Alt. Routes
IDENTIFY ROADWAYS FOR SIGNAL CONTROL AND TRAVEL TIME
2.3.2
Selected Roadways & Detectors; Devices
MAINTAIN DEVICE PLANS
2.3.3
Device Plans
CHART System Admin
Traffic Mgmt Engineers
CHART System
NODE:
2.3
TITLE:
MAINTAIN TRAFFIC PLANS
NUMBER:

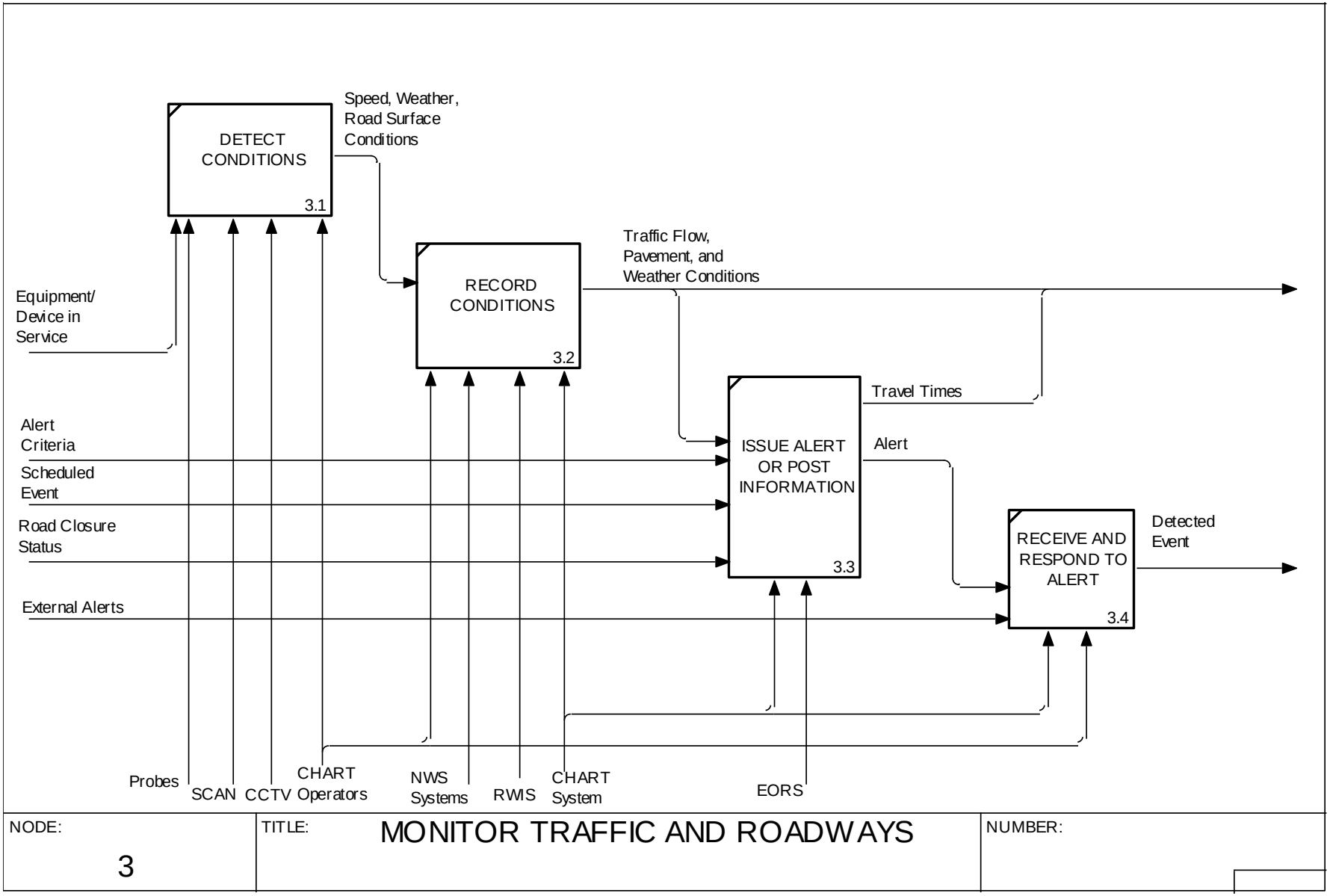
DETECT CONDITIONS
3.1
Speed, Weather, Road Surface Conditions
RECORD CONDITIONS
3.2
Traffic Flow, Pavement, and Weather Conditions
Equipment/ Device in Service
Travel Times
Alert Criteria
Scheduled Event
Road Closure Status
ISSUE ALERT OR POST INFORMATION
3.3
Alert
RECEIVE AND RESPOND TO ALERT
3.4
Detected Event
External Alerts
Probes
SCAN
CCTV
CHART Operators
NWS Systems
RWIS
CHART System
EORS
NODE:
3
TITLE:
MONITOR TRAFFIC AND ROADWAYS
NUMBER:

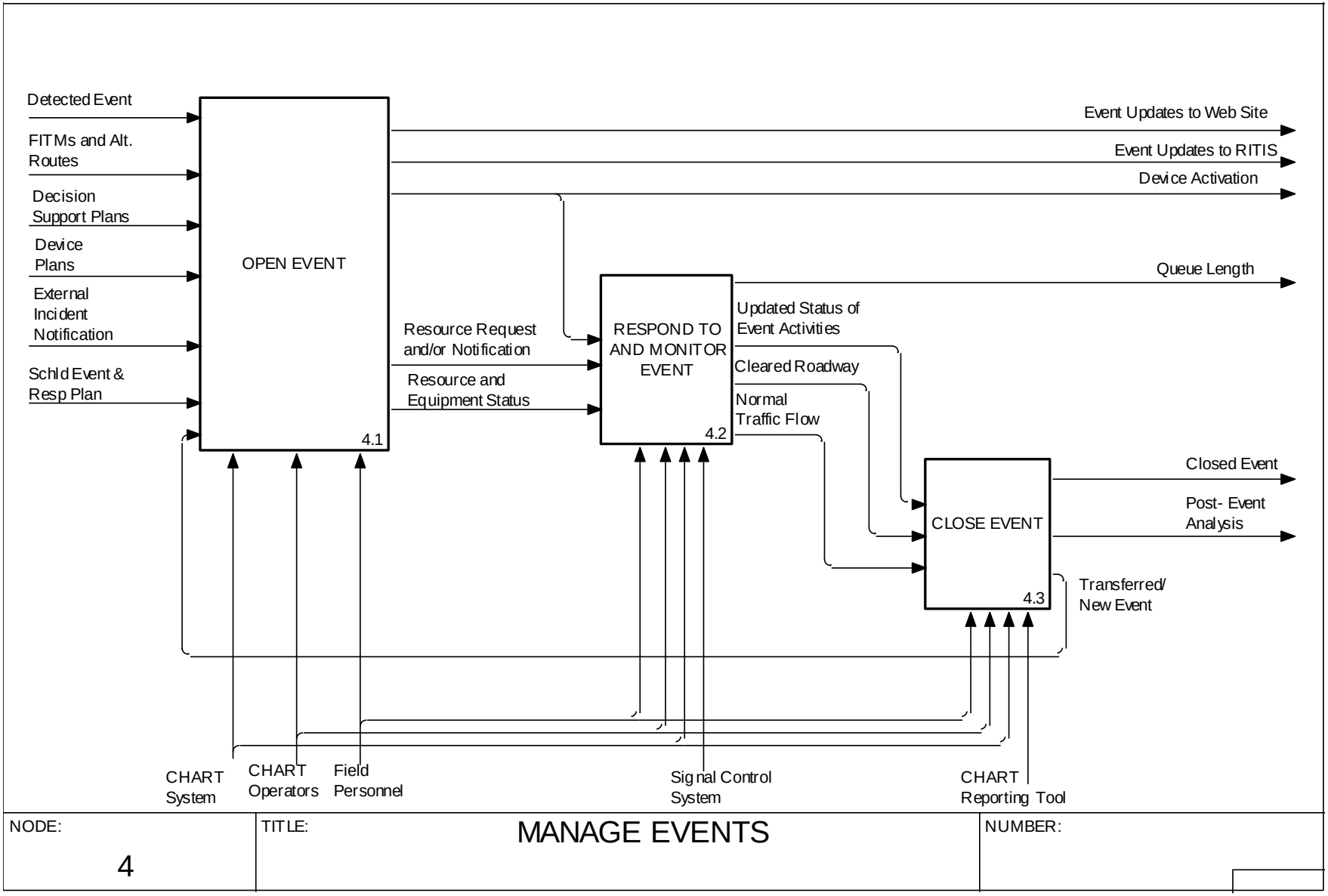
Detected Event
FITMs and Alt. Routes
Decision Support Plans
Device Plans
External Incident Notification
Schld Event & Resp Plan
OPEN EVENT
4.1
Resource Request and/or Notification
Resource and Equipment Status
RESPOND TO AND MONITOR EVENT
4.2
Event Updates to Web Site
Event Updates to RITIS
Device Activation
Queue Length
Updated Status of Event Activities
Cleared Roadway
Normal Traffic Flow
CLOSE EVENT
4.3
Closed Event
Post- Event Analysis
Transferred/ New Event
CHART System
CHART Operators
Field Personnel
Signal Control System
CHART Reporting Tool
NODE:
4
TITLE:
MANAGE EVENTS
NUMBER:

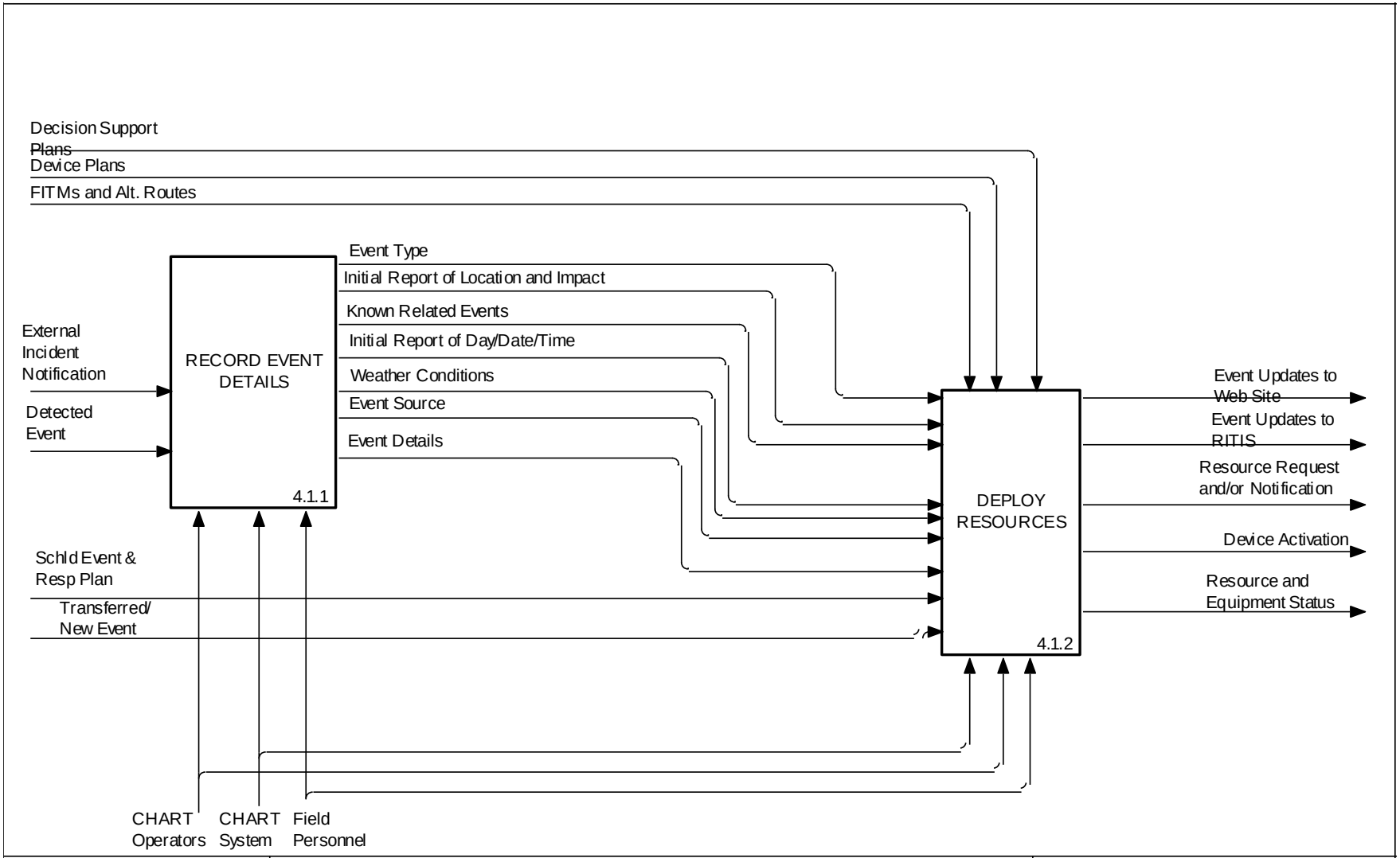

NODE:	TITLE:	NUMBER:
4.1	OPEN EVENT	

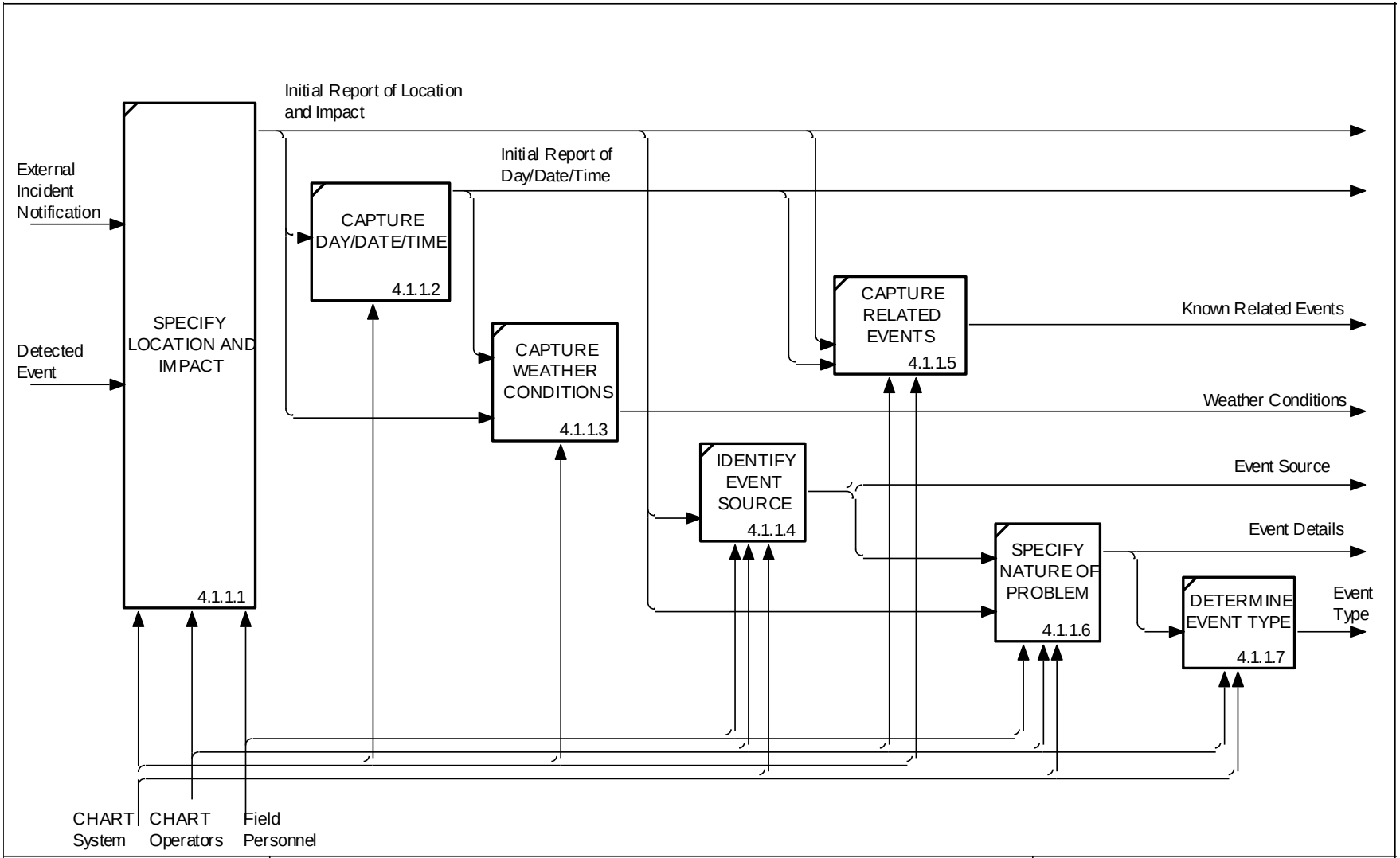

NODE:	TITLE:	NUMBER:
4.1.1	RECORD EVENT DETAILS	

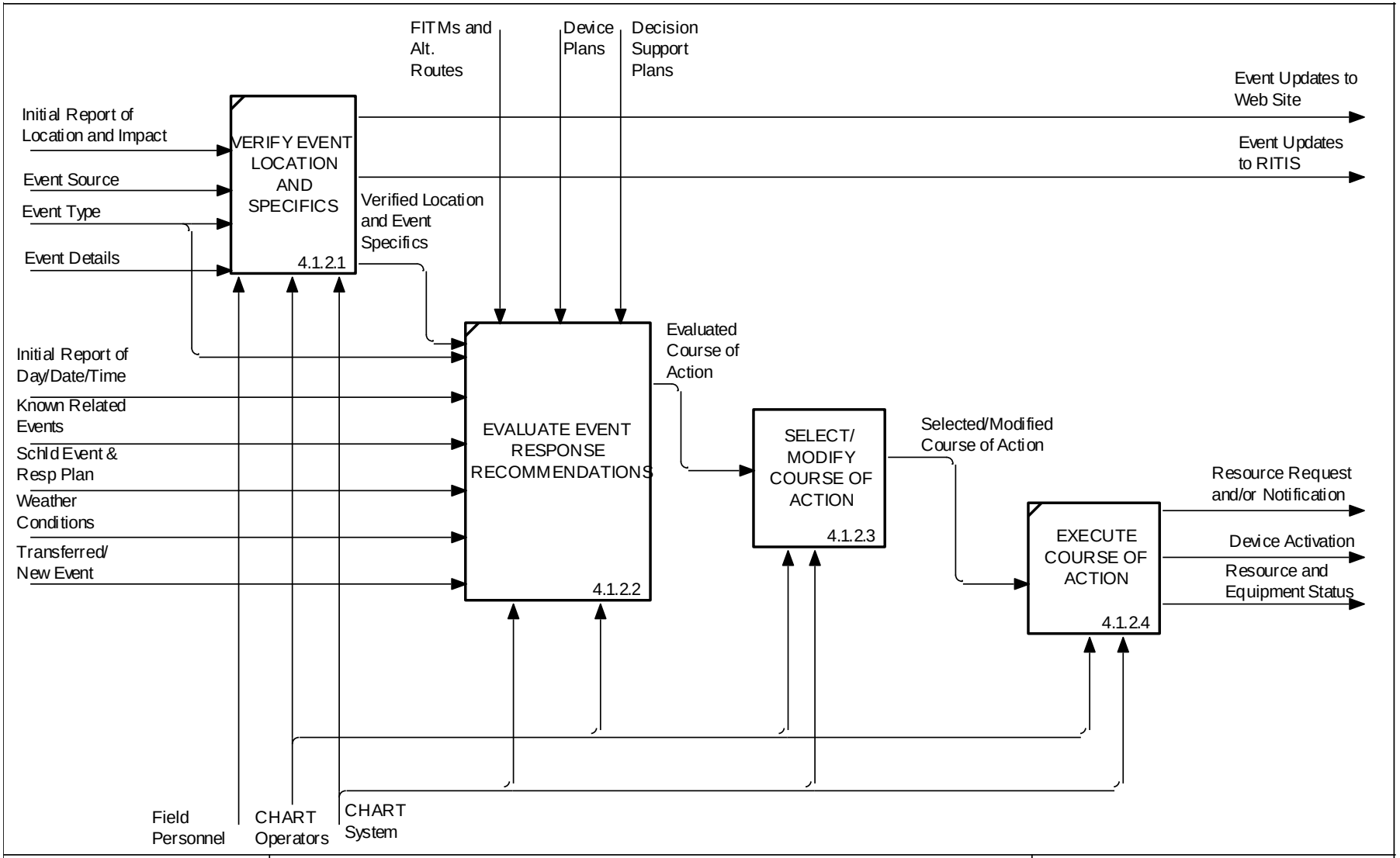

NODE:	TITLE:	NUMBER:
4.1.2	DEPLOY RESOURCES	

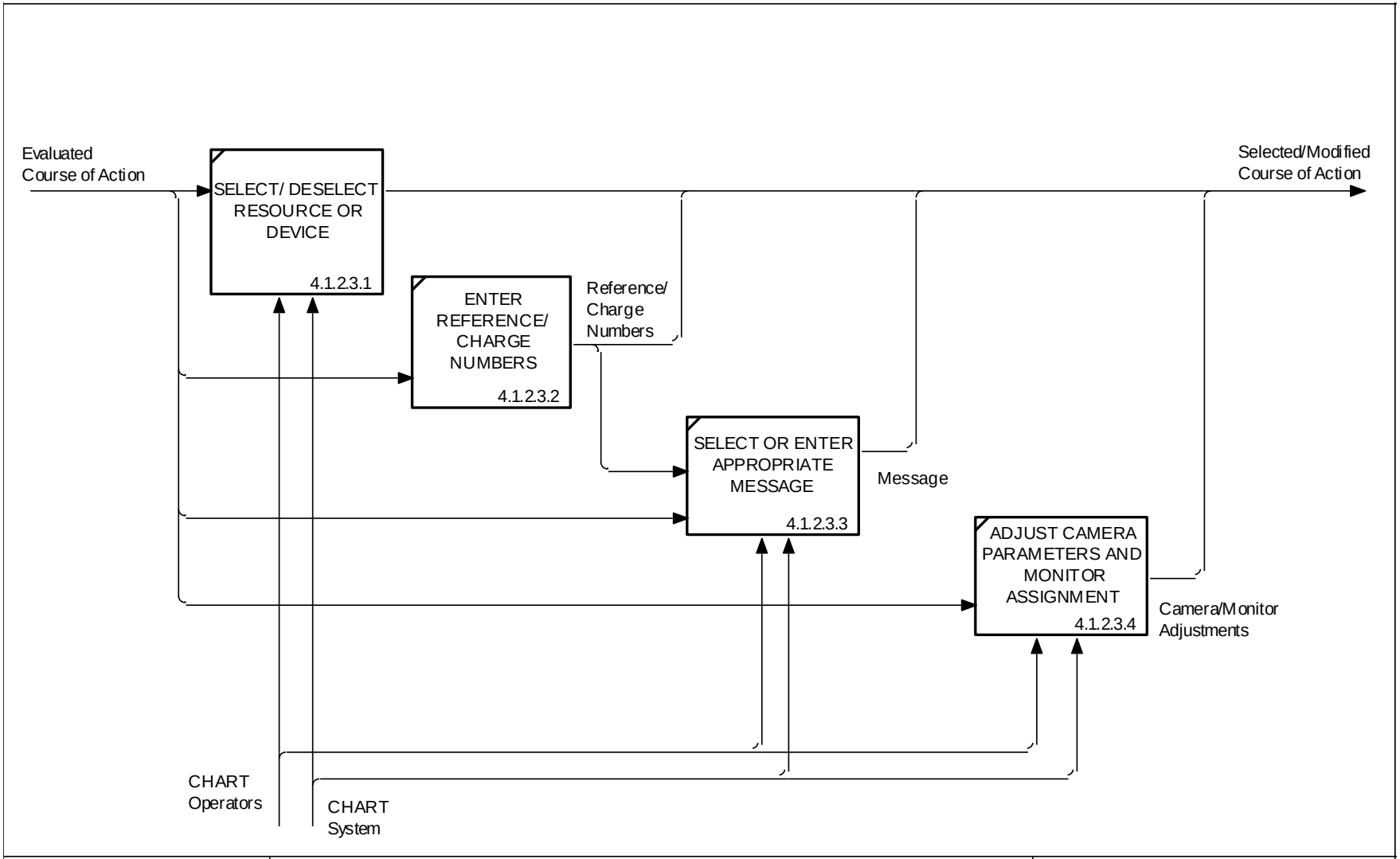

NODE:	TITLE:	NUMBER:
4.1.2.3	SELECT/ MODIFY COURSE OF ACTION	

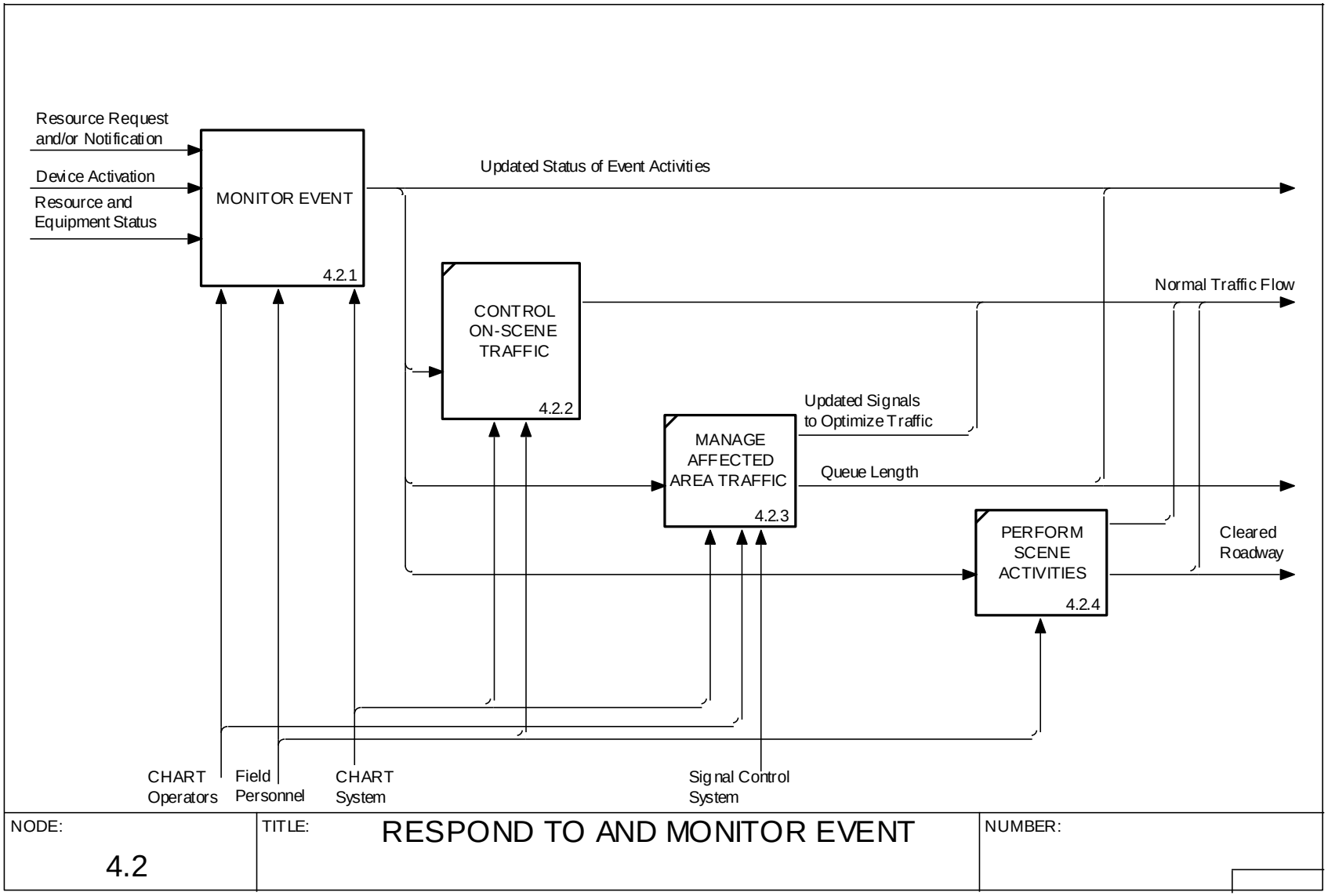

NODE:	TITLE:	NUMBER:
4.2	RESPOND TO AND MONITOR EVENT	

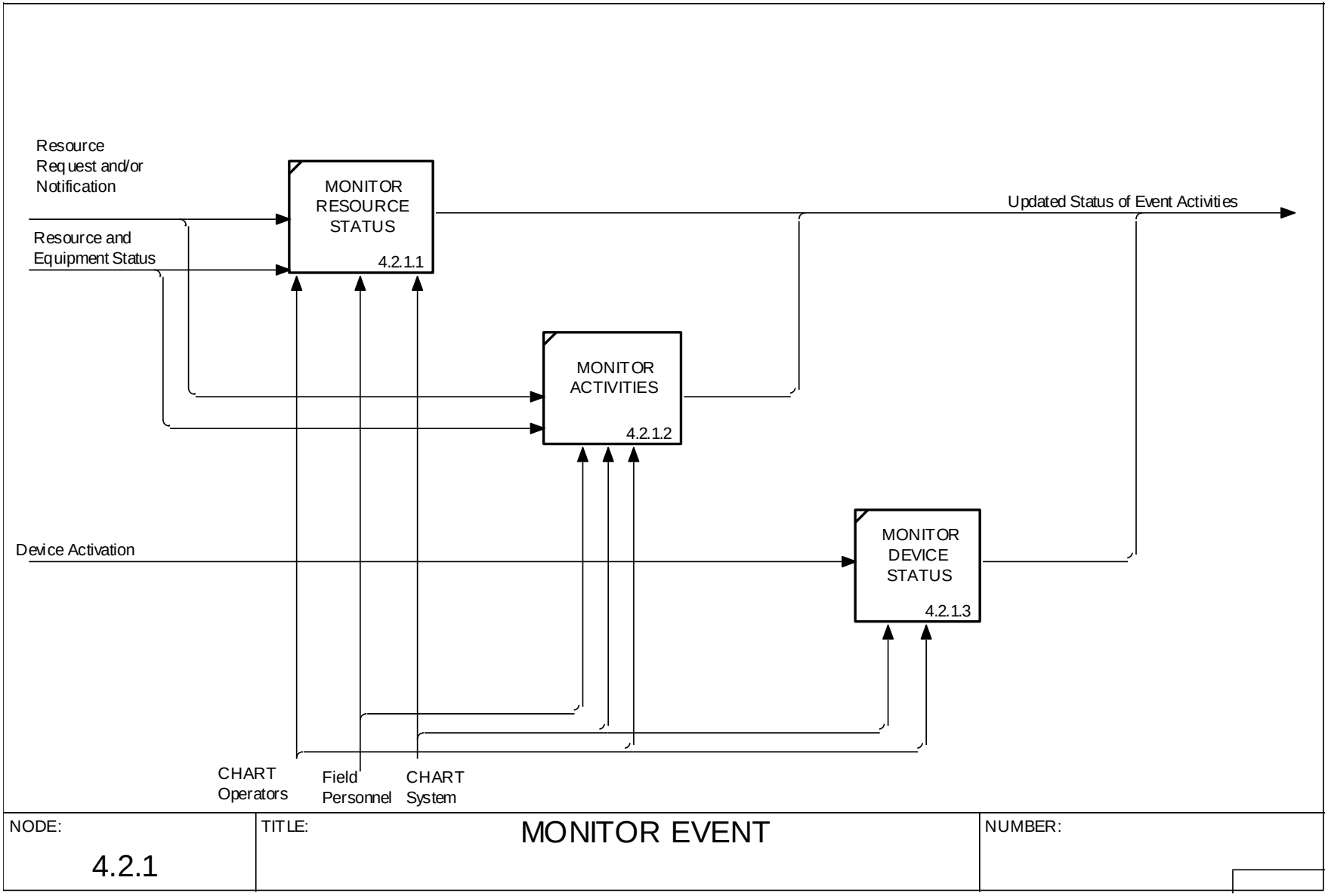
Resource
Request and/or
Notification
Resource and
Equipment Status
MONITOR
RESOURCE
STATUS
4.2.1.1
Updated Status of Event Activities
MONITOR
ACTIVITIES
4.2.1.2
Device Activation
MONITOR
DEVICE
STATUS
4.2.1.3
CHART
Operators
Field
Personnel
CHART
System
NODE:
4.2.1
TITLE:
MONITOR EVENT
NUMBER:

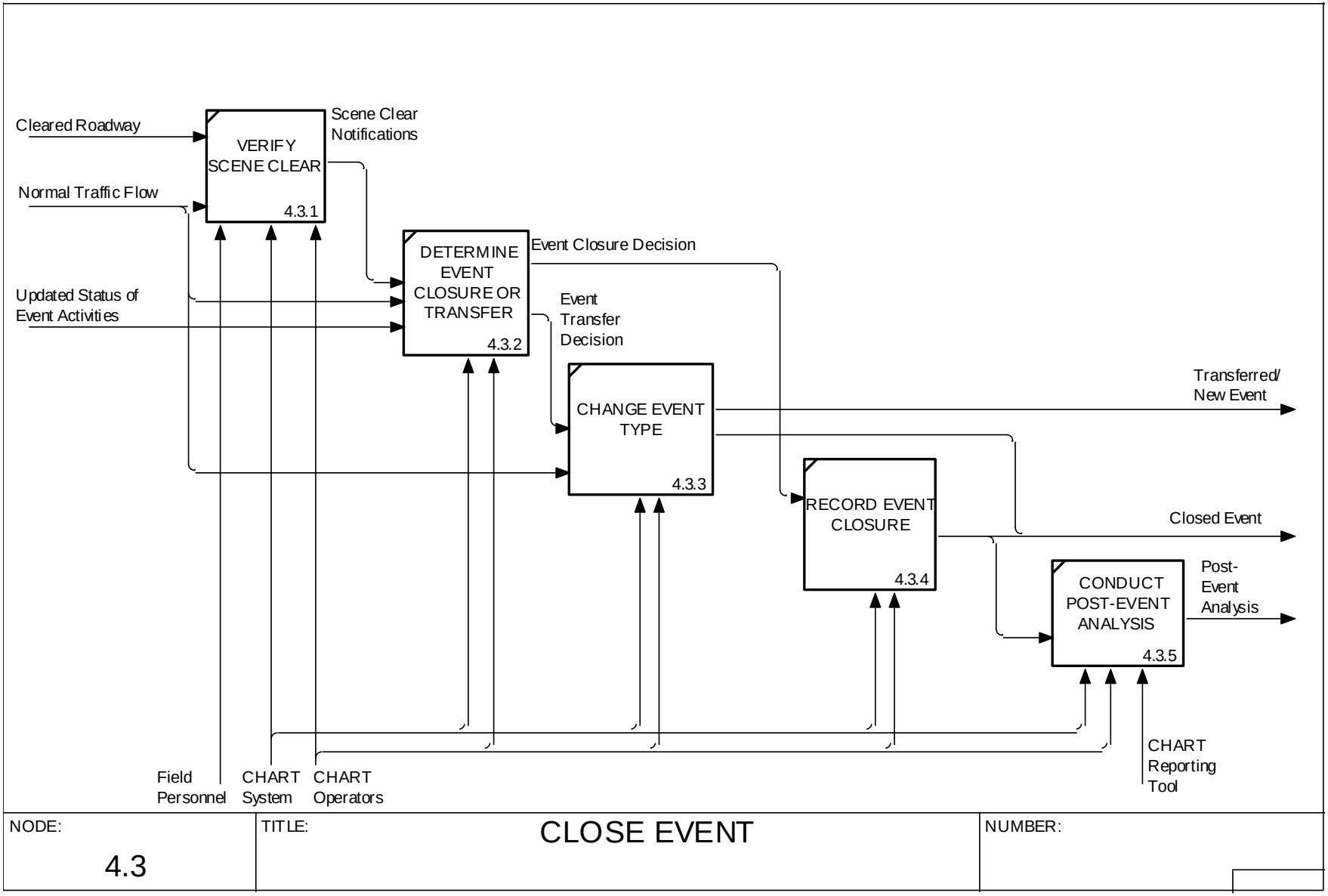
Cleared Roadway
Normal Traffic Flow
VERIFY SCENE CLEAR
4.3.1
Scene Clear Notifications
DETERMINE EVENT CLOSURE OR TRANSFER
4.3.2
Event Closure Decision
Updated Status of Event Activities
Event Transfer Decision
CHANGE EVENT TYPE
4.3.3
Transferred/ New Event
RECORD EVENT CLOSURE
4.3.4
Closed Event
CONDUCT POST-EVENT ANALYSIS
4.3.5
Post-Event Analysis
Field Personnel
CHART System
CHART Operators
CHART Reporting Tool
NODE:
4.3
TITLE:
CLOSE EVENT
NUMBER:

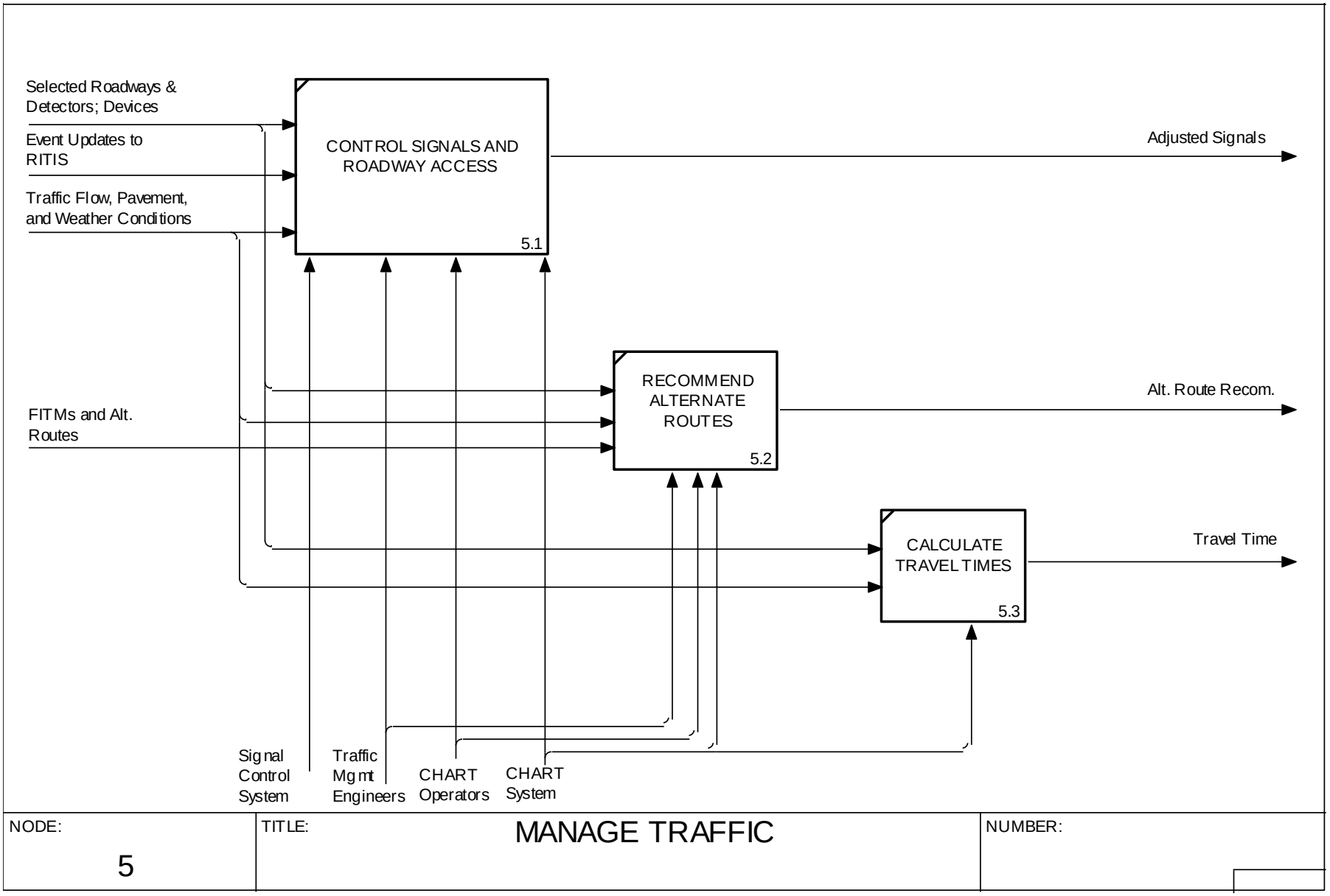
Selected Roadways & Detectors; Devices
Event Updates to RITIS
Traffic Flow, Pavement, and Weather Conditions
CONTROL SIGNALS AND ROADWAY ACCESS
5.1
Adjusted Signals
FITMs and Alt. Routes
RECOMMEND ALTERNATE ROUTES
5.2
Alt. Route Recom.
CALCULATE TRAVEL TIMES
5.3
Travel Time
Signal Control System
Traffic Mgmt Engineers
CHART Operators
CHART System
NODE:
5
TITLE:
MANAGE TRAFFIC
NUMBER:

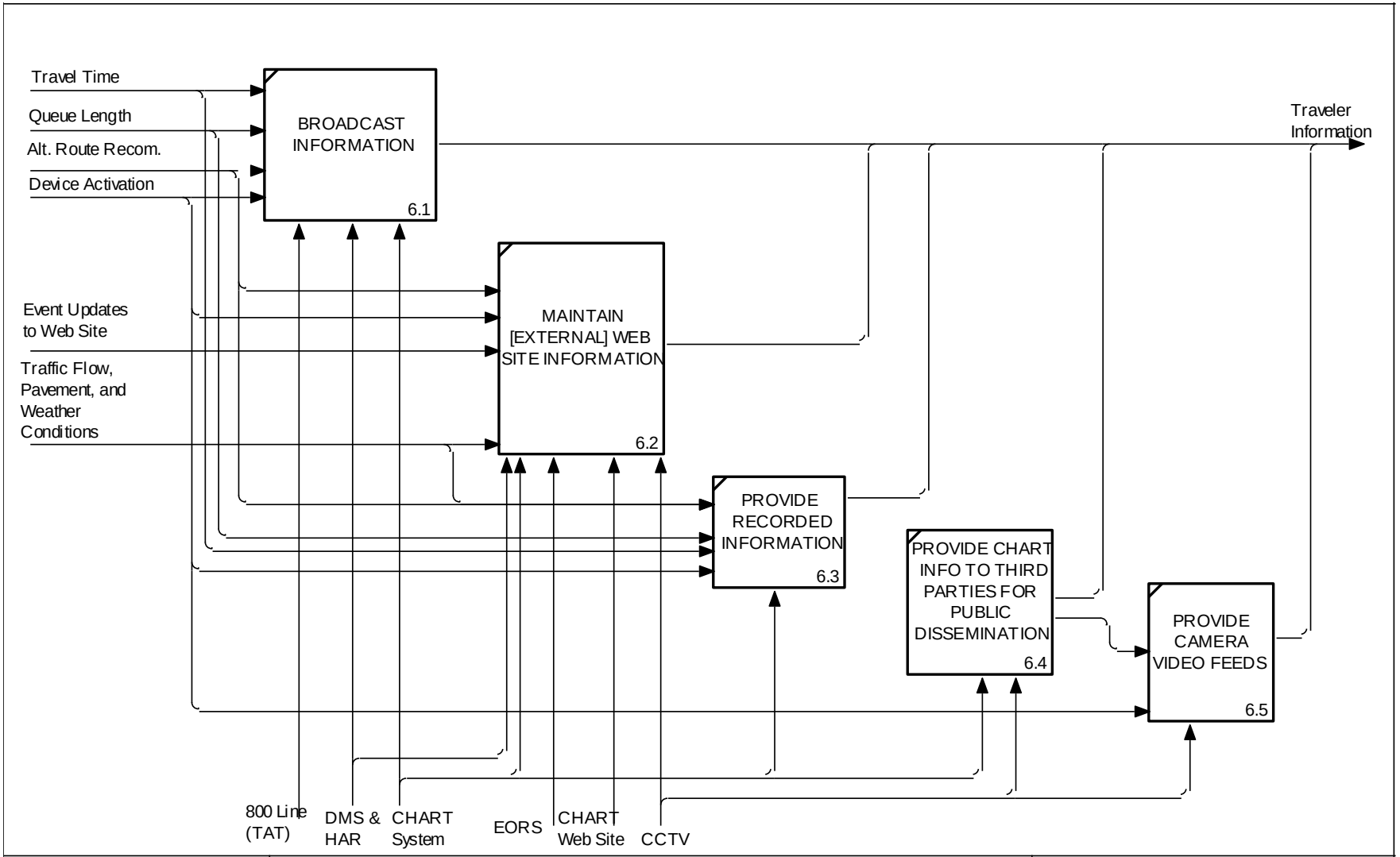

NODE:	TITLE:	NUMBER:
6	PROVIDE TRAVELER INFORMATION	

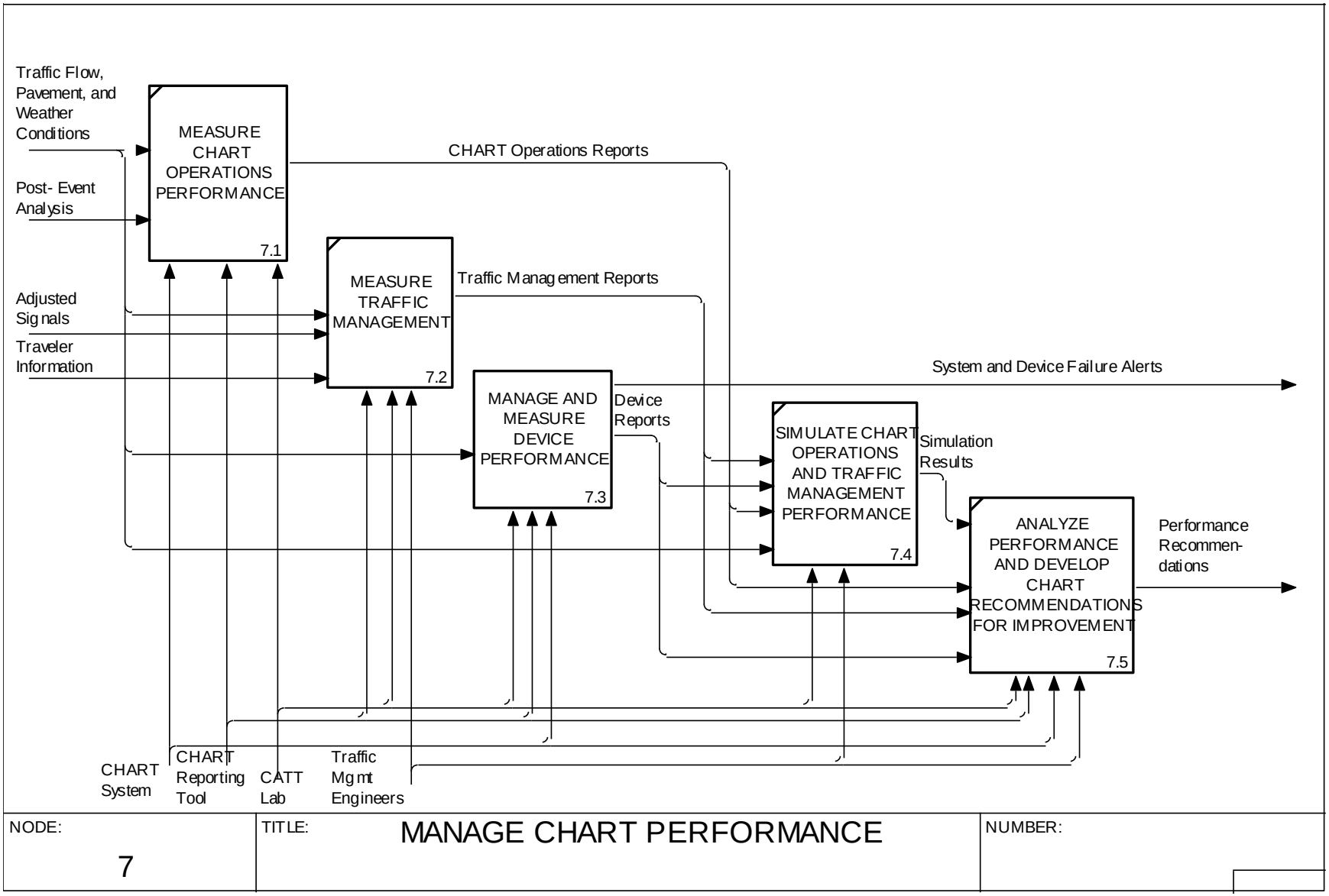

NODE:	TITLE:	NUMBER:
7	MANAGE CHART PERFORMANCE	

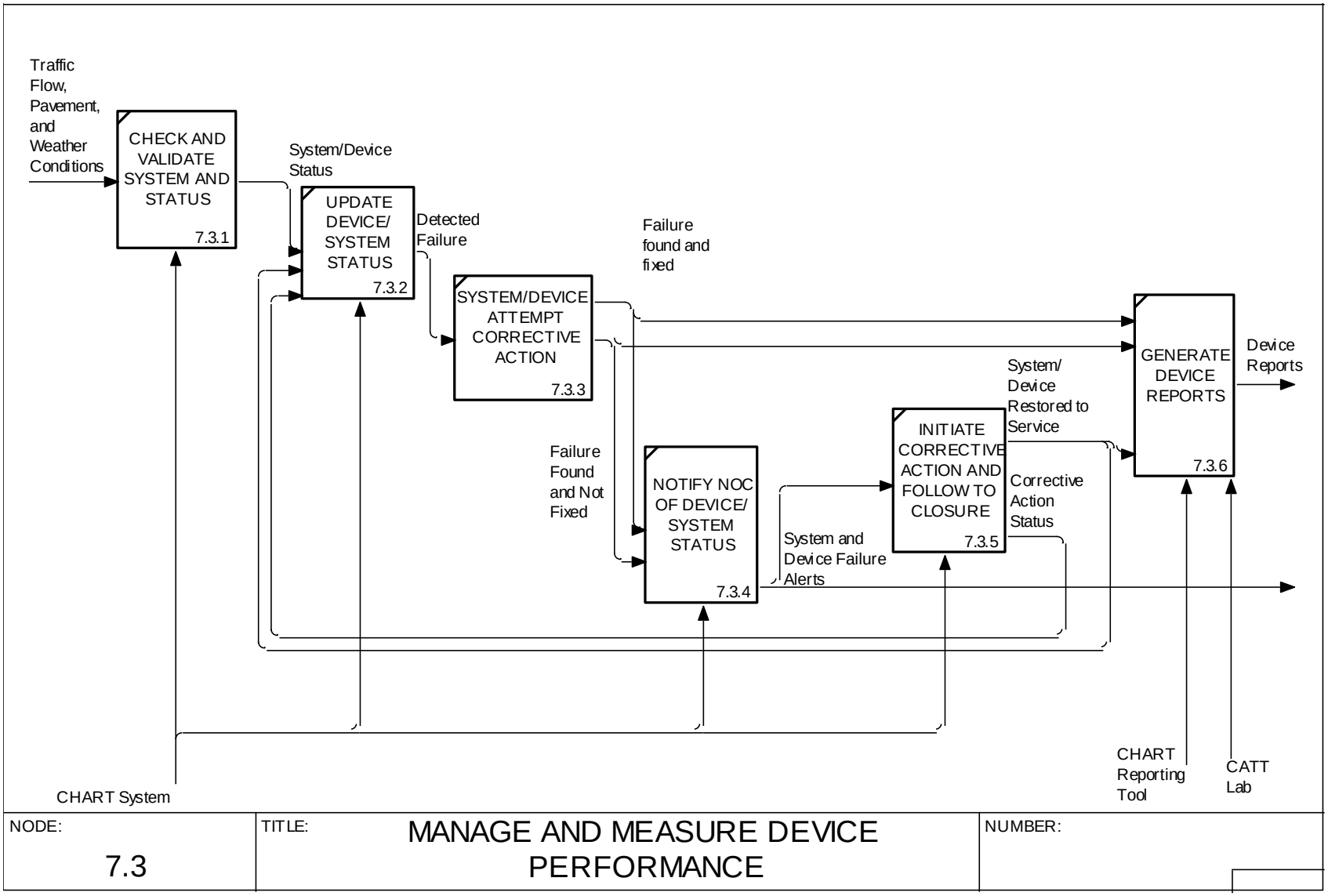

NODE:	TITLE:	NUMBER:
7.3	MANAGE AND MEASURE DEVICE PERFORMANCE	

This page intentionally left blank

Appendix C – Deliverables Cross-Reference

This appendix illustrates a comparison of the deliverables itemized within the Maryland State SDLC, CHART RFP, and the recommended CHART deliverables. As can been seen in the table, all information specified with the SDLC and the RFP will be available using the deliverables recommended within this document.

MD SDLC Phase	MD SDLC Deliverables	CHART RFP Section	CHART RFP Deliverables	CHART PMP Section
Initiation Phase	Concept Proposal	From it's inception, CHART has required that it be built in accordance with proven software and systems development methodology. All previous releases of CHART under ITPR-10 were defined in the detailed BAA which was analogous to the SDLC Initiation, Concept, Planning and Requirements Analysis phases. Each subsequent release of CHART under this new contract will begin with this updated base design validation and continue the Design, Development, Integration/Testing, Implementation and O&M of the SDLC under approved work orders.		
	Project Management Charter			
System Concept Development Phase	System Boundary Document			1.2.1.3 Base Design Validation
	Information Technology Project Request (ITPR)			1.2.1.3 Base Design Validation
	Risk Management Plan			1.2.1.3 Base Design Validation
Planning Phase	Project Management Plan			Program Management Plan
Requirements Analysis Phase	Requirements Document			3.4.3 Updated Software Requirements
	Test & Evaluation Master Plan			3.4.3 Updated Software Requirements
Design Phase	System Design Document	III System Design	1. High Level System Design Specification	3.4.4 Detailed Design Document
		III System Design	2. Detailed System Design Specification	3.4.4 Detailed Design Document
	Security Risk Assessment	III System Design	3. Risk Assessment Plan	3.4.2 Scope Document/Project Plan
	Contingency Plan	III System Design	4. Contingency Plan	3.4.2 Scope Document/Project Plan
Development Phase	Software Development Document	IV System Development & Test	1. Software Development Document	3.4.3 Updated Software Requirements
	System Software			3.4.5 Integration Test Plan/Procedures

MD SDLC Phase	MD SDLC Deliverables	CHART RFP Section	CHART RFP Deliverables	CHART PMP Section
	Test Files and Data			3.4.5 Integration Test Plan/Procedures
	Integration Document	IV System Development & Test	2. Integration Document	3.4.5 Integration Test Plan/Procedures
	Test Analysis Report	IV System Development & Test	3. Test Analysis Report (including load / stress testing)	3.4.7 System/Factory Test Report
	Conversion Plan			3.4.4 Detailed Design Document
	Implementation Plan	IV System Development & Test	4. Implementation Plan	3.4.9 Transition Plan
	Operations Manual			3.4.8 O & M Guide
	Maintenance Manual			3.4.8 O & M Guide
	System Administration Manual	IV System Development & Test	5. Systems Administration Manual (updated from the previous build)	3.4.13 User's Guide
	Training Plan	IV System Development & Test	7. Training Plan for 10 CHART Technical and Operations Staff	3.4.11 Training Plan
	User Manual	IV System Development & Test	6. Users' Manual (updated from the previous build)	3.4.13 User's Guide
Integration and Test Phase	Test Analysis Approval Determination	V Integration and Test	1. Integration Test Plan	3.4.5 Integration Test Plan/Procedures
		V Integration and Test	3. Test Analysis Approval Determination Plan Report	3.4.6 System/Factory Test Plan/Procedures
	Test Problem Report(s)	V Integration and Test	2. System Test Problem Report(s)	3.4.7 System/Factory Test Report
	Information Technology Security Certification & Accreditation			
		VI Operational Readiness	2. Test Operational Readiness	3.4.7 System/Factory Test Report
		VI Operational Readiness	3. End-To-End Performance Testing	3.4.7 System/Factory Test Report
		VI Operational Readiness	4. Review of all procedures	3.4.7 System/Factory Test Report
		VI Operational Readiness	5. Go/No go decision	3.4.10 Operations Readiness

MD SDLC Phase	MD SDLC Deliverables	CHART RFP Section	CHART RFP Deliverables	CHART PMP Section
			meeting	review
Implementation Phase	Delivered System Documentation			3.4.12 Delivery Documentation
	Change Implementation Notice	VII Implementation	1. Change Implementation Notice	3.4.12 Delivery Documentation
	Version Description Document	VII Implementation	2. Version Description Document	3.4.12 Delivery Documentation
	Post-implementation Review Report			3.4.14 BAA Update
		VI Operational Readiness	1. Training	3.4.11 Training Plan
		VII Implementation	3. User Training and documentation for 10 CHART Operations Staff and Technical System Administration	3.4.11 Training Plan
		VII Implementation	4. Update to CHART BAA	3.4.14 BAA Update
		VIII Documentation and Post Implementation Performance Period	1. Final Documentation for System, User, and Training to include but not be limited to: a. System software and test files/data b. Documentation of technical environment c. Documentation of software requirements d. Documentation of network/system environment and security architecture e. Software and Maintenance Support Plan f. Maintenance Agreement and Service Agreement g. Updated Security Plan	See Above
		VIII Documentation and Post Implementation Performance Period	2. “System” Acceptance (initial performance period sign-off)	3.4.12 Delivery Documentation

MD SDLC Phase	MD SDLC Deliverables	CHART RFP Section	CHART RFP Deliverables	CHART PMP Section
		VIII Documentation and Post Implementation Performance Period	3. Final Performance Period and Sign-off	
Operations and Maintenance Phase	Program Trouble Reports			3.4.15 Weekly Status Report
				3.4.16 Monthly Status report
		X On-going	2. Invoices (section 1.41)	3.4.17 Invoice
	Change Implementation Notice			3.4.12 Delivery Documentation
	In-process Review	X On-going	3. Meetings and Reporting (section 2.2.17)	Weekly Status Meeting
				3.4.18 Quarterly Program Reviews
	User Satisfaction Review			3.4.19 Quarterly Governance Board Meetings
				3.4.20 Quarterly Technical Advisory Meetings
		IX Warranty Period	1. Contractor will submit for approval a certification of completion of the 60 Day Performance Warranty from section 2.2.14.1	3.4.21 Release Performance Approval
		X On-going	1. Project Management Plan Updates (section 2.2.8)	Program Management Plan
Disposition Phase	Disposition Plan	XI End-of-Contract Transition	1. Transition Plan for Transition to State or State Agent	
		XI End-of-Contract Transition	2. Transition Support As Required	
	Post-termination Review Report			

Appendix D – Suggested J2EE Migration

CHART should consider evolving the system architecture to reflect the state-of-the-art technologies and approaches while preserving the investment and operational characteristics of the CORBA based system.

One of the areas of technological focus is the current use of the CORBA middleware and remote services architecture within the CHART software. CORBA was a leading edge solution at the time the system was designed and built and it has served CHART well as its underlying inter-process communications (IPC) architecture. While CORBA can continue to provide the communications IPC backbone internally for some years to come, there are reasons to consider a migration to a more change-orientated architecture which will better serve to extend the software's life and enhance the platform's ability to accept all planned future enhancements.

D.1 Definition of J2EE

J2EE is a platform-independent Java-centric environment for building multiple, concurrent user, distributed applications. Additionally, J2EE is a development paradigm with a standardized architectural approach and well-defined design patterns and documented best practices. Although targeted for web-based applications, its advantages apply to all large-scale systems that anticipate a long life with dynamic change and growth. Fundamentally, J2EE decomposes system development into a series of well-defined tiers and layers within those tiers. Because each layer concentrates a single architectural feature, developers have a single, clear place in which to implement each feature.

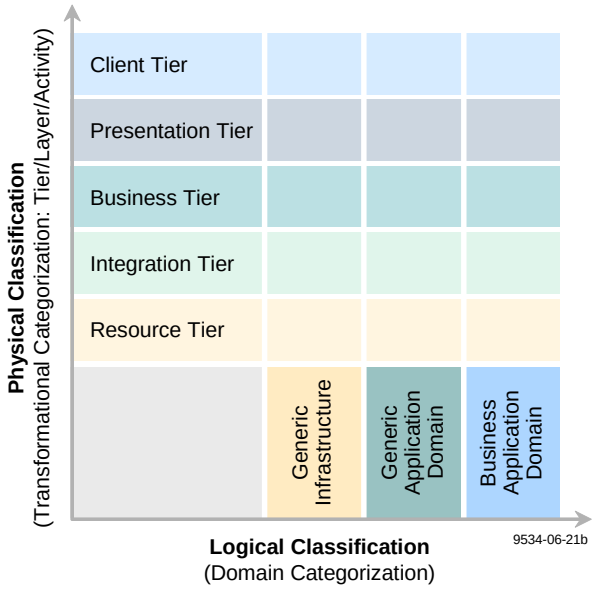

J2EE Tier Diagram

D.2 J2EE Partitioning by Physical and Logical Classification

The above partitioning diagram gives a top-level look at how J2EE supports change management by strictly identifying where each architectural feature is to be developed. This structure prevents leakage of information into other areas thus minimizing the affected area for a given change. For example, the Presentation Tier/Generic Infrastructure square contains implementations needed for the presentation interface of any type of system (e.g., error reporting) whereas the Presentation Tier/Generic Application Domain square only contains the implementation of the presentation interface for any type of command and control system (e.g., security). Lastly, the Presentation Tier/Business Application Domain square only contains the implementation of the presentation interface for an advanced traffic control system such as CHART. Although not depicted in this diagram, each square breaks down further into sub-tiers (layers) and sub-domains. These examples demonstrate the fine-grained guidance that J2EE gives designers to ensure each architectural feature is implemented in the appropriate solution space — and only in the proper solution space.

A major benefit of J2EE is its ability to absorb and accommodate change in terms of process, middleware and COTS products. When any aspect of the system needs to change, there is generally a single tier or layer, or a narrow slice through the layers, that is affected. J2EE's isolation of system functions and responsibilities allows multiple teams to simultaneously work on different parts of the system without affecting each other. In this context, change really means any aspect of the system from business rules on how to handle a DMS, to which vendor's database is to be used, to switching from CORBA to another middleware solution for internal communication. Because the impact of developers' changes are minimized, parallel development is more efficient and leads to faster deliveries to the field.

Some of the architectural advantages achieved by J2EE are:

- Uses an industry-proven approach for addressing technical problems common to large-scale, multi-user, multi-process, concurrent usage systems such as CHART
- Improves scalability as J2EE supports load balancing, component distribution, encapsulation, flexibility, extensibility, and right-sized granularity that all are essential for different types of scalability concerns
- Decomposes the component and layer implementations (supports re-implementation without impacting other layers)
- Clearly defines and isolates where business rules are implemented to prevent convolution of business logic with other types of logic
- Clearly defines and isolates where system responsibilities are implemented thereby making the system easier to learn, develop, and maintain
- Supports simultaneous implementations of similar technologies (e.g., multiple middleware implementations such as CORBA, Java Messaging Service, and WebServices can all co-exist as needs evolve)

D.3 CHART Migration from CORBA to a J2EE-based Architecture

J2EE decomposes common architectural features found in complex systems such as CHART by applying design patterns and conventional object-oriented analysis and design so that it is obvious to developers where each feature belongs, begins and ends. In addition to taking the guesswork out of how a system should be structured, this decomposition makes it possible for designers to create a migration path from an existing architecture such as the current CORBA approach used by CHART. This suggested migration path can be aggressive or cautious. The following migration approach best leverages the current investment in CORBA while gradually preparing CHART to support future changes and technologies.

- Retain CHART User Interface and all existing CHART CORBA services
- Allocate the CHART User Interface browser to the Client Tier
- Allocate the CHART User Interface servlet and the CHART User Management Service to the Presentation Tier
- Allocate the database, field devices and the following CHART services to the Resource Tier: DMS Service, HAR Service, TSS Service, Field Communications Service, Video Service, Traffic Event Service, Message Utility Service, and EORS Service
- Allocate the CORBA Trader and Event services to the Integration Tier
- Wrap the existing CHART and CORBA services so they expose an interface appropriate to their tier while retaining their current CORBA interface
- Develop new sub-systems and features using the full J2EE approach including use of the newly-wrapped CHART and CORBA services
- As the intervening J2EE tiers are completed and new sub-systems use the newly-wrapped interfaces, a decision can be made to phase out the CORBA inter-process communication and replace it with another solution

The suggested migration starts with this allocation step, and continues through a four-step process as shown in the figure on the next page. After allocating the CHART services, wrap the services, new subsystems use the wrappers, and as a final step, the CORBA paths are removed.

Effectively this migration approach starts out by treating most of the existing CORBA services as external systems but gives them a new identity in the J2EE architecture. As the old CORBA identity falls into disuse, it becomes irrelevant as higher-level tiers take on the service's old responsibilities.

This suggested gradual approach protects the current investment and minimizes risk while fulfilling J2EE's promise of providing a clear path to new technologies and improved change management.

This page intentionally left blank

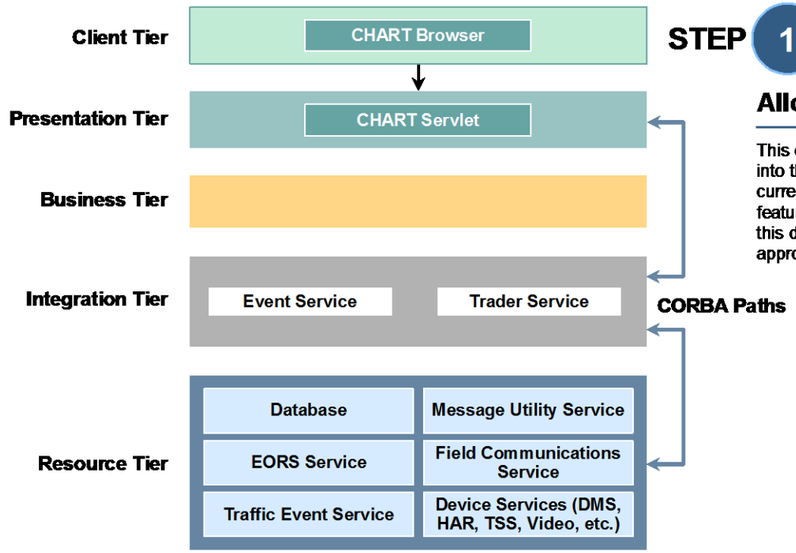

STEP 1

Allocate CHART Services

This diagram maps the existing components into their appropriate tiers. Although each current CHART component actually contains features normally found in many J2EE tiers, this diagram places them in the most appropriate slot within the J2EE structure.

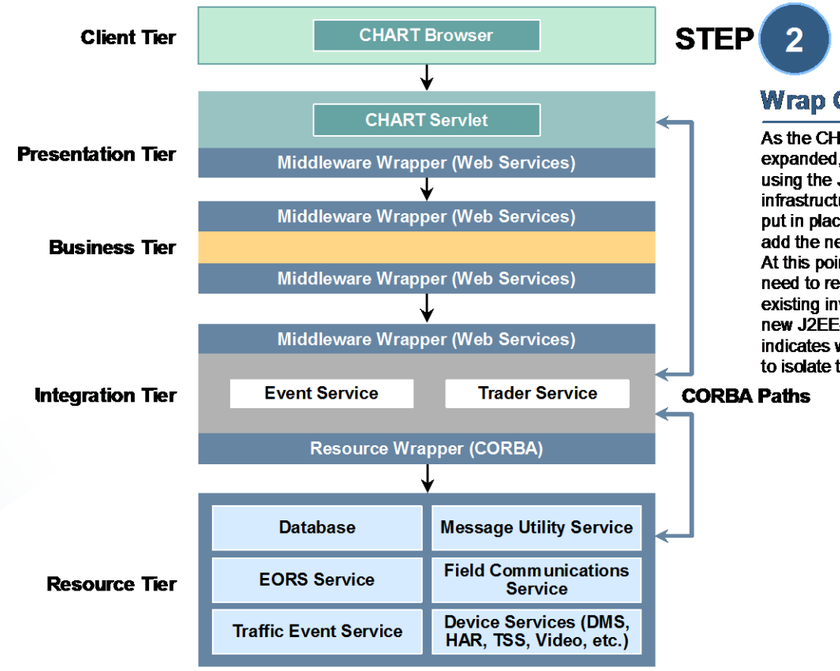

STEP 2

Wrap CORBA

As the CHART system continues to be expanded, the new functions will be built using the J2EE architecture. The basic infrastructure for J2EE development will be put in place, and the software will begin to add the new communications middleware. At this point, the CORBA elements that need to remain in order to maintain the existing investment will be wrapped in the new J2EE-based middleware. This diagram indicates where the new interfaces are built to isolate the existing CORBA components.

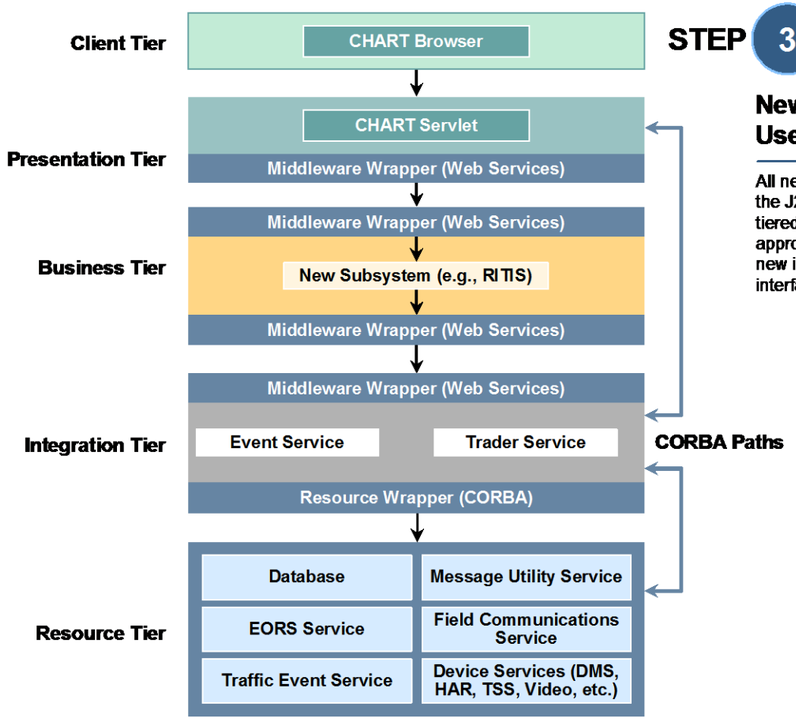

STEP 3

New Subsystems Use Wrapper

All new components will be built based on the J2EE concept. Each service will use a tiered design and implementation approach. This diagram illustrates how the new implementations will use the new interface wrappers.

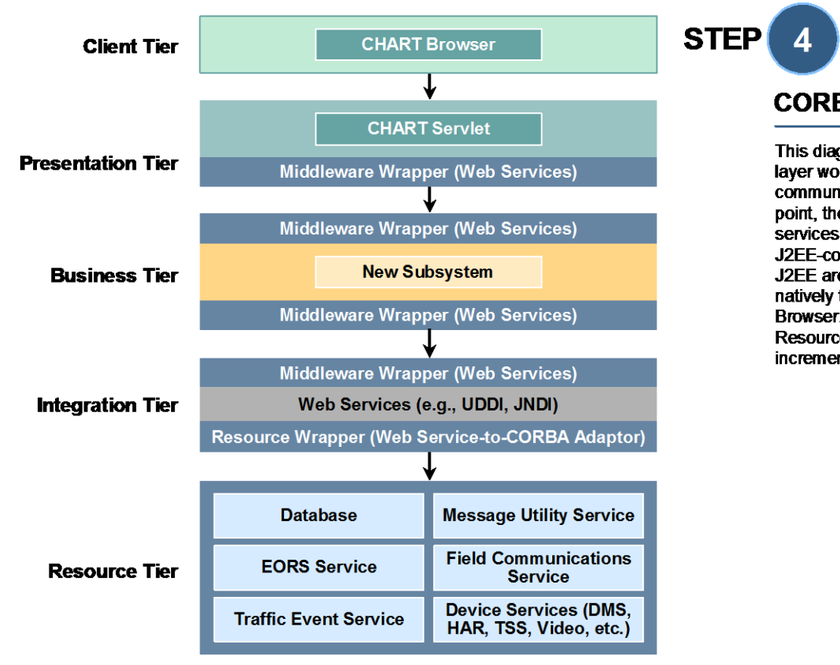

STEP 4

CORBA Paths Removed

This diagram shows how the CORBA layer would be replaced in the communications between the tiers. At this point, the path between existing CHART services and the CHART browser will be J2EE-compliant. New services can use J2EE architectures such as Web Services natively to communicate to the CHART Browser. CORBA processes within the Resource Tier can be adapted incrementally if and when necessary.

This page intentionally left blank

Appendix E – National ITS Architecture Standards and Conformance

Introduction

Intelligent Transportation Systems (ITS) encompasses a wide range of diverse technologies which include information processing, communications, control and electronics. The ITS standards encourage safety and efficiency for travelers on the nation's highways through the use of ITS technologies and standard communications protocols for more reliable, efficient and secure communication between devices. The SHA-06-CHART contract provides policies and procedures for implementing section 5206(e) of the Transportation Equity Act for the 21st Century (TEA–21), Public Law 105–178, 112 Stat. 457, pertaining to conformance with the National ITS Architecture and Standards 940.11.

E.1 Portions of ITS Architecture Being Implemented (Maryland Statewide, Metropolitan Washington Regional or CVISN):

The Coordinated Highways Action Response Team (CHART) Systems Development effort is the execution of the project referenced in Table 2.7 – Statewide Projects of the Maryland Statewide ITS Architecture. This states:

> CHART Operating Software Development - Continuous development of MDSHA's CHART Program operating software to include several new features and upgrades over a five-year period. – *Status: Programmed*

The applicable Element within the Maryland Statewide ITS Architecture is defined as:

> CHART SOC – CHART Statewide Operation Center (SOC) is a Specific Element that represents the systems and personnel responsible for improving the real-time operations of Maryland's highway system through teamwork and technology. The CHART SOC is located in Hanover, Maryland. This center houses the backbone database for multiple transportation operations in Maryland, and provides a connection between the regional CHART Traffic Operations Centers (TOCs) located throughout the State, as well as various other transportation stakeholder agencies. CHART is responsible for operating ITS (incident management, traffic control, snow removal, etc.), coordinating with other agencies during incidents, and performing other traffic engineering to improve highway operations.

Architecture flows that will be implemented by the CHART Systems Development Project are being defined as a part of the completion of the Business Area Architecture document. Furthermore, the suggested architecture flows would be too numerous to mention in this document. The Maryland Statewide ITS Architecture is a primary source of reference during the requirements gathering sessions, including the applicable stakeholders, elements, architecture flows and associated standards within the final report located at: http://www.itsmd.org/files/MDArch_apr2005.pdf.

E.2 Participating Agencies and Their Roles/Responsibilities:

Maryland Department of Transportation (MDOT) State Highway Administration (SHA) is the lead participating agency in the ITS Development and Device Test-Bed activities. Participating SHA offices/divisions include the Office of CHART, Office of Maintenance (OOM – Communications Division), and Office of Traffic and Safety (OOTS – Traffic Engineering Design Division and Traffic Operations Division). Roles and responsibilities for SHA within the Project are shown in Table E-1 below.

Several existing stakeholders within the CHART Program are anticipated to have a continued role in deploying the CHART System Development Project. Additionally, other stakeholders will be defined through the requirements gathering process. Table 1 shows the preliminary Project stakeholders along with their roles and responsibilities.

Table E-1 – Participating Agencies and Their Roles/Responsibilities

Agency-Role	Responsibilities											
	Validation of Planning and Requirements for CHART System	Design of CHART System	Develop and Test CHART System	Integrate and Test CHART System Development	Define Operation of CHART System	Implement CHART System	Document Development of CHART System	Operate CHART System	Maintain CHART System	Support Validation of Planning and Requirements for CHART System	Support Integration of CHART System	Support Operation of CHART System
Maryland State Highway Administration (SHA) - Lead	√	√	√	√	√	√	√	√	√			
Maryland Transportation Authority (MdTA) - Support								√		√	√	√
Maryland State Police (MSP) - Support										√	√	√
Prince George's County Department of Public Works and Transportation (DPWT) - Support										√	√	√
Montgomery County DPWT - Support										√	√	√
Baltimore County Police – Support										√	√	√
Baltimore City Police - Support										√	√	√
Maryland Emergency Management Agency										√	√	√

Agency-Role	Responsibilities											
(MEMA) - Support												
Maryland Institute for Emergency Medical Services Systems (MIEMSS) - Support										√	√	√
Harford County Emergency Operations Center (EOC) - Support										√	√	√
Anne Arundel County EOC - Support										√	√	√
Baltimore County EOC - Support										√	√	√
Anne Arundel County DPWT - Support										√	√	√
U.S. Park Police - Support										√	√	√
District of Columbia Department of Transportation (DDOT) - Support										√	√	√
Virginia Department of Transportation (VDOT) - Support										√	√	√
Howard County Emergency Operations Center (EOC) – Support										√	√	√
Frederick County Emergency Operations Center (EOC) - Support										√	√	√

E.3 Concept of Operations:

The CHART System concept of operations (within this document) encompasses of four major categories of business objectives:

- CHART is intended to be a statewide traffic management system, not limited to one or two specific corridors of high traffic volumes, but expandable to cover the entire state as funds, resources, and roadside equipment become available to support traffic management.
- CHART is intended to be a coordination focal point, able to identify incidents, congestion, construction, road closures and other emergency conditions; and then able to direct the resources from various agencies, as necessary, to respond to recurring and nonrecurring congestion and emergencies. It should also manage traffic flow with traveler advisories and signal controls, and coordinate or aid in the cleanup and clearance of obstructions.
- CHART is intended to be an information provider, providing real-time traffic flow and road condition information to travelers and the media broadcasters, as well as providing real-time and archived data to other state agencies and local, regional, inter-state, and private sector partners.
- CHART is intended to be a 7 day per week, 24 hours per day operation with the system performing internal processing and status checks to detect failed system components and resetting or reconfiguring itself where appropriate, or notifying operators and/or maintenance staff where necessary for service.

E.4 Requirements Definitions:

CHART provides technical and business support for the purpose of enhancing the CHART Advanced Traffic Management System (ATMS). The Base Design Validation provides the following:

- Gather the objectives, requirements and system functionality from Attachment J, CHART Systems Documentation. (See the CHART website reading room at: http://www.chart.state.md.us/readingrom/chartrfp.asp)
- Facilitate Joint Applications Development (JAD) -Type meetings with current CHART, multi-agency operational and support staff to identify new or updated:
    - CHART traffic management requirements,
    - Relevant-state and federal ITS standards, and
    - Relevant homeland security standards and opportunities.
- Update the BAA with the new case for action, vision of the future CHART System to include business processes, organization, location, application, data, technology, performance objectives, and release strategy.

E.5 Analysis of Alternative System Configurations and Technology Options:

CHART's approach to Systems Engineering, through the use of CSC's Catalyst's Systems Engineering processes, has been successfully applied to the CHART Advanced Traffic Management System (ATMS) in the past and is illustrated below**.** The CHART development approach is once again starting with a *baseline analysis* of the existing ATMS where we compare it against a number of external and internal forces of change, which results in products that provide a thorough understanding of the existing ITS relationship to those forces. Our next step is to *research* technology and operational alternatives, analyze their compatibility and influence, and generate the necessary requirements and *design* to define enhancement opportunities. We validate the design components to ensure that they meet National ITS Standards. We may prototype these technologies and concepts to further understand operational relationships and relationships among components, allowing us to refine and validate the design. Once a release is defined by these requirements and detailed system design, we perform comprehensive planning for the implementation of the system. This *planning documentation* provides the road map for a smooth and efficient implementation and includes any technical, budgetary, and political constraints that influence or may impact the schedule and cost of the release. As shown below, this is where the acquisition method and any technology options are thoroughly reviewed.

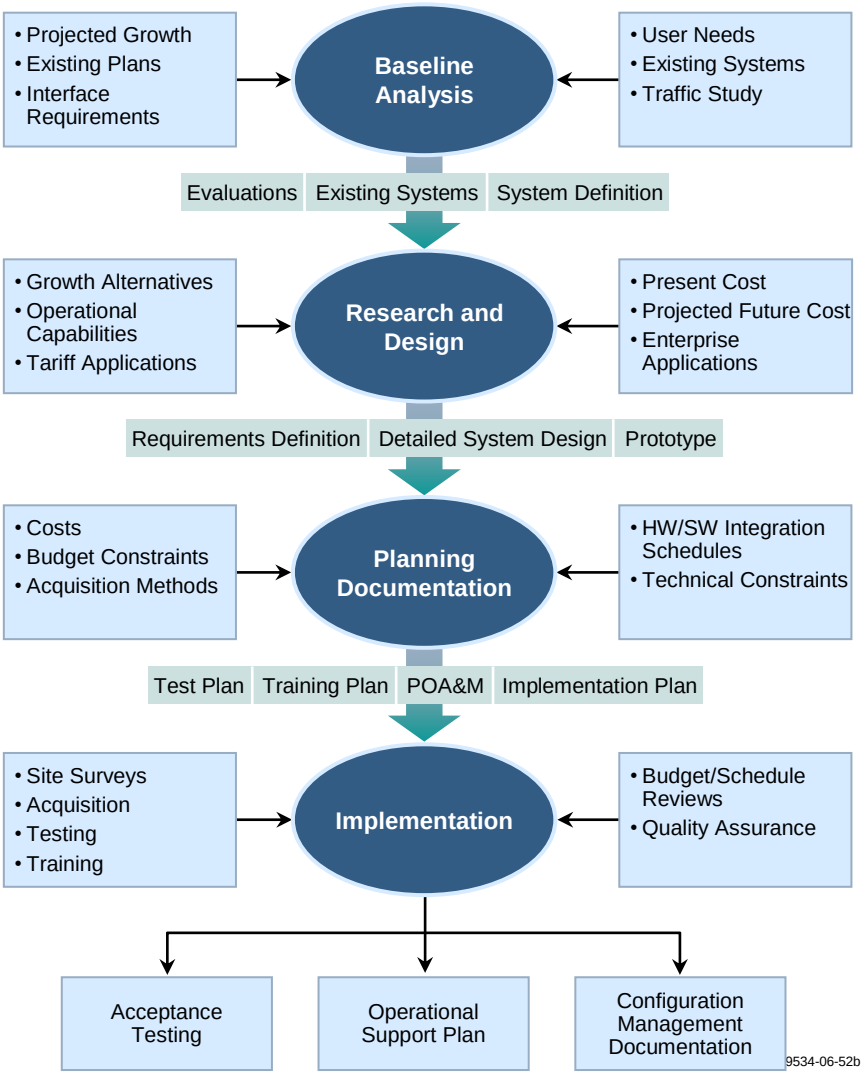

These items will be discussed in a each BAA update at the conclusion of each successive Work Order or CHART ATMS Release.

E.6 Procurement Options:

The contract provides for material buys of software and hardware, and systems development and integration using a well-defined methodology for five (5) years duration with five (5) option years. Procurement of materials can be done by SHA at their option, if it is in the best interest of SHA. Follow-on Work Orders will be based on Time and Material. Labor will be based upon approved labor categories and labor rates.

E.7 Applicable ITS Standards and Testing Procedures:

CHART has already been designed utilizing current standards in the three areas of:

- Data storage,
- Center-to-center communications, and

- Field communications.

In the area of **data storage**, the team utilizes the Traffic Management Data Dictionary (TMDD) to define attributes stored in the database. The TMDD contains the national ITS standard data definitions for data elements. Any data elements in the TMDD that are needed by the application use the TMDD definitions. Additional attributes needed to implement the CHART system requirements are documented and added to these standard table definitions.

In the area of **center-to-center communications**, the CHART system design utilizes CORBA for transactions between software components. CORBA has been chosen as one of two approved methods of communication between ITS software components by the National Transportation Communications for ITS Protocol (NTCIP) Center-to-Center Committee. In 1999, the design team referenced the burgeoning object model that was currently being developed by the Center-to-Center Committee, but found that it has not yet defined system interfaces. Thus, the CHART system design has been developed to separate standard interfaces from those that are clearly CHART system-specific. Furthermore, the CHART team submitted its current interface definitions and designs to the Center-to-Center Committee as a potential starting place for standard interface definitions.

In the area of **field communications**, the CHART system design is consistent with current national standards. This design supports the addition of NTCIP-compliant devices when such devices are acquired.

As stated above, each build of CHART is required to implement Section 5206(e) of the TEA–21, Public Law 105–178, 112 Stat. 457 (pertaining to conformance with the National ITS Architecture and Standards), and will include "applicable ITS standards and testing procedures" in the update to each BAA.

E.8 Procedures/Resources for Operations and Management of the System:

In the original BAA for CHART, operations and maintenance of the system is highlighted as one of the four pillars of the CHART Program that must be followed to meet CHART's business objectives of a 24 x 7 real-time regional incident management system. The Organization section of the BAA emphasized the need for a full-time commitment from the CHART Program with responsibilities that are outlined in Table E-2.

Table E-2: CHART Program Organizational Responsibilities

Organizational Entity	Major Responsibilities
SHA Deputy Administrator, Chief Engineer - Operations	• Strategy and planning • Manage budget and funding • Define business objectives
Office of CHART and ITS Development Director	• Strategy and planning • Manage budget and funding • Define, measure, and manage business objectives • Define and monitor operational objectives

Operations Team Manager	• Traffic management of state highways and arterials • Manage ETP, ERU and HOT operations • Monitor, measure, and manage operational accomplishments • Plan, prepare, and conduct ER training
ITS Development Team Manager	• Investigate new technologies • Develop ITS strategy • Define ITS objectives • Manage ITS development and deployment
Systems Integration Team Administrator	• ITS systems planning and strategy • Maintain infrastructure equipment and configuration • CHART application administration and configuration • Network administration and maintenance • Legacy systems administration • Applications change control and configuration management • CHART application maintenance • Database administration • CHART functional and user training

CHART has met these needs (through positions and contracts from SHA) and will continue to emphasize their need as they implement section 5206(e) of the TEA–21, Public Law 105–178, 112 Stat. 457 (pertaining to conformance with the National ITS Architecture and Standards), and will include "procedures and resources necessary for operations and management of the system" in the update to each BAA.

E.9 CHART's Current State of Standards and Compliance

CHART continues to support the Maryland ITS Architecture. All new or enhanced architecture flows will be documented as a part of this section at the end of every release.